ಬಿ.ಎಂ.ಎಸ್. ತಾಂತ್ರಿಕ ಮಹಾವಿದ್ಯಾಲಯ, ಬೆಂಗಳೂರು

(ಸ್ವಾಯತ್ತ ವಿದ್ಯಾ ಸಂಸ್ಥೆ)

ಬುಲ್ ಟೆಂಪಲ್ ರಸ್ತೆ, ಬೆಂಗಳೂರು – ೫೬೦ ೦೧೯

BMS COLLEGE OF ENGINEERING

(Autonomous college under VTU)

BENGALURU-560019

ELECTRICAL & ELECTRONICS ENGINEERING

Scheme V- VIII Semester

Syllabus V-VI Semester

2014-2018

BMSCOLLEGEOFENGINEERING, BENGALURU

Autonomous College under VTU

VISION	MISSION
Promoting prosperity of mankind by augmenting human resource capital through quality technical education& training	Accomplish excellence in the field of technical education through education, research and service needs of society

DEPARTMENT OF ELECTRICAL & ELECTRONICS ENGINEERING

THIRD AND FOURTH YEAR SYLLABUS BOOK

With effect from A. Y. 2016 – 17

Table of Contents

Content	PageNo.
Abbreviations	
Vision-Mission of the Department	
Program Educational Objectives	
Program Outcomes	
Scheme of Instructions for V-VIIISemester	
Course Code Nomenclature	
Syllabus for Transmission and Distribution	
Syllabus for Electrical Machines I	
Syllabus for Electrical Energy systems	
Syllabus for Digital Signal Processing	
Syllabus for Measurements and Instrumentation	
Syllabus for Department Elective –I	
Syllabus for Measurements and Controls Lab	
Syllabus for Power systems –I	
Syllabus for Electric Machines -II	
Syllabus for Power Electronics -I	
Syllabus for Modern Control Theory	
Syllabus for Department Elective - II	
Syllabus for Cluster Elective -I	
Assessment	

AY	Academic Year
AAT	Alternative Assessment Tools
BOE	Board of Examiners
BOS	Board of Studies
CBCS	Choice Based Credit System
CGPA	Cumulative Grade Point Averages
CIE	Continuous Internal Evaluation
CO	Course Outcomes
DC	Departmental Core
GC	Group Core
HSS	Humanity and Social Science Courses
IC	Institutional Core
IE	Institutional Elective
IL	Institutional Lab
LTPS	Lecture-Tutorial-Practical-Self Study
NFTE	Not Fit for Technical Education
PCC	Professional Core Courses
PEC	Professional Elective Courses
PEO	Program Educational Objectives
PO	Program Outcomes
SEE	Semester End Examination
SGPA	Semester Grade Point Average
ST	Studio

DEPARTMENT VISION	DEPARTMENT MISSION
Facilitating the development of competent professionals capable of adapting to the constantly changing global scenario in the field of Electrical Sciences	• Impart quality technical education and encourage research in the field of Electrical Sciences. • Empower every individual to develop as a professional with an ability to apply his/her knowledge and skills to adapt to the evolving technological requirements of society.

PROGRAMEDUCATIONAL OBJECTIVES (PEOs)

The PEOs have been evolved in alignment with the vision and mission of the Department. The broad objective of the program is to facilitate the development of competent and successful professionals in tune with modern day technological and societal requirements.
Therefore, after concerted interactions (both formal and informal) with all major constituents including Alumni, Employers, experts from industry and institutions, faculty and students, parents etc., the following Program Educational Objectives of the UG course offered by Electrical and Electronics Engineering department have been arrived at:

The PEOs of the program are as under:

1. **PEO-1:**Possess successful careers in Electrical Sciences, and allied areas and pursue higher education with a broad knowledge base in Mathematics and Engineering principles.

2. **PEO-2:**Utilize their technical, analytical, communicative and managerial skills and knowledge for societal progress and enrich them to keep in pace with relevant advancements by engaging themselves in lifelong learning.

3. **PEO-3:** Exhibit professionalism by displaying competence, leadership, dedication and commitment.

Program Outcomes

Program outcomes (POs), are attributes acquired by the students at the time of graduation. The POs given in the table below, ensure that the POs are aligned to the Graduate Attributes (GAs) specified by National Board of Accreditation (NBA). These attributes are measured at the time of graduation and hence computed every year for outgoing batch. The POs are addressed and attained through the Course Outcomes (COs) of various courses of the curriculum.

MAPPING OF COURSES TO PROGRAM OUTCOMES

Program Outcomes		Courses
PO-1	Apply the knowledge of mathematics, science, and engineering principles to the solution of electrical and allied engineering problems.	Basic Electrical Engg, Linear Circuit analysis, Field Theory , Signals and Systems, Digital Signal Processing, Modern Control Theory
PO-2	Formulate and analyze complex engineering problems using first principles of mathematics, physical and engineering sciences.	Linear Circuit analysis, Field Theory ,Signals and Systems, Digital Signal Processing, Modern Control Theory, EES, TND
PO-3	Design solutions for complex engineering problems, and design system components that meet specific societal needs.	DSP,Microcontrollers,Power Systems I & II,Power Electronics I & II, E1&2,Switch Gear Protection, EES
PO-4	Design and conduct experiments and analyze and interpret data for complex systems.	EES,PS1,PS2,AME,DE,AIC,MC,DSP,MC1&2,MCT
PO-5	Select and apply appropriate modern engineering tools to complex engineering activities with an understanding of the limitations.	SIM LAB1,SIM LAB2,MC1&2,PS1&2,PE1&2 MCT,MC,DSP
PO-6	Apply reasoning informed by contextual knowledge to assess societal health, safety, legal and consequent responsibilities relevant tothe professional engineering practice.	Professional Practices In Electrical Tech,TND
PO-7	Understand the impact of the professional engineering solutions in societal and environmental contexts, and demonstrate the knowledge of, and need for sustainable development.	EES, Professional Practices in Electrical Tech
PO-8	Understand ethical principles and	Professional Practices in Electrical Tech,

	social issues.	Professional Ethics ,EES
PO-9	Function effectively as an individual, and as a member or leader in diverse teams to accomplish a common goal.	Projects, Self-study
PO-10	Communicate effectively with diverse audiences and able to write effective reports and design documentation.	Seminars,Projects,Self-study
PO-11	Demonstrate knowledge and understanding of the engineering and management principles and apply these to one's own work, as a member and leader in a team, to manage projects in multi-disciplinary environments.	Project Management,Projects
PO-12	Recognize the need to engage in independent and lifelong learning in the context of technological change.	Self-Study Component, Participation In Extension Lectures,Value Added Courses, Workshops.

PROGRAM SPECIFIC OUTCOMES

The students will have the ability to:

PSO1:Develop models, analyze and assess the performance of different types of generation, transmission, distribution and protection mechanisms in power systems**.**

PSO2: Design, develop, analyze and test electrical and electronics systems; deploy control strategies for power electronics related and other applications.

PSO3: Measure, analyze, model and control the behavior of electrical quantities associated with constituents of energy or allied systems.

MAPPING OF COURSES TO PROGRAM SPECIFIC OUTCOMES

PSO	Courses
PSO1: Develop models, analyze and assess the performance of different types of generation, transmission distribution and protection mechanisms in power systems.	Transmission and Distribution Electrical Energy Systems Power systems 1 Power systems 2 Switchgear and Protection
PSO2: Design, develop, analyze and test electrical and electronics systems; deploy control strategies for power electronics related and other applications.	Machines-I & II, Power Electronics-I &II+Lab+SS Microcontrollers+Lab+SS Signals and Systems Analog Micro Electronics+Lab+SS Digital Electronics +Lab+SS
PSO3: Measure, analyze, model and control the behavior of electrical quantities associated with constituents of energy or allied systems.	Analog integrated circuits + Lab+SS Linear circuit analysis Digital Signal Processing + Lab + SS Field Theory Control systems Modern control theory Controls and Measurements Lab Simulation Lab I & II

CREDIT SUMMARY

2014-2018 Batch

Sem	HSS	BSC	ESC	PCC		PEC		IEC	Project	Seminar/ Internship	Total
				DC	GC	DE	CE				
I	02	10	13	-		-		-	-	-	**25**
II	03	09	13	-		-		-	-	-	**25**
III	-	04	-	01	20	-		-	-	-	**25**
IV	-	04		01	20	-		-	-	-	**25**
V	-	-	-	22		03		-	-	-	**25**
VI	-	-	-	19		03	03	-	-	-	**25**
VII	-	-	-	12		03	03	03	04	-	**25**
VIII	04	-	-	03	03			03	10	02	**25**
Total	**09**	**27**	**26**	**58**	**43**	**09**	**06**	**06**	**14**	**02**	**200**

V Semester Scheme

Sl. No.	Course Code	Course Title	Credits				
			L	T	P	S	Total
1	16EE5DCTND	Transmission and Distribution	3	0	0	0	**3**
2	16EE5DCMC1	Electric Machines – I	3	0	1	2	**6**
3	16EE5DCENS	Electrical Energy Systems	3	0	0	0	**3**
4	16EE5DCDSP	Digital Signal Processing	3	0	1	2	**6**
5	16EE5DCMNI	Measurements and Instrumentation	3	0	0	0	**3**
6	16EE5DE1XX	Department Elective I	3	0	0	0	**3**
7	16EE5DCMCL	Measurements and Controls Lab	0	0	1	0	**1**
Total			**18**	**0**	**3**	**4**	**25**

VI Semester Scheme

Sl. No.	Course Code	Course Title	Credits				
			L	T	P	S	Total
1	16EE6DCPS1	Power Systems – I	3	1	0	0	04
2	16EE6DCMC2	Electric Machines – II	3	0	1	2	06
3	16EE6DCPE1	Power Electronics-I	3	0	1	2	06
4	16EE6DCMCT	Modern Control Theory	2	1	0	0	03
5	16EE6DE2XX	Department Elective-II	3	0	0	0	03
6	16XX6GE1XX	Cluster Elective – I	3	0	0	0	03
Total			**17**	**2**	**2**	**4**	**25**

VII Semester Scheme

Sl. No.	Course Code	Course Title	Credits				
			L	T	P	S	Total
1	16EE7DCPS2	Power System – II	3	1	0	0	**4**
2	16EE7DCSGP	Switchgear and Protection	3	0	1	0	**4**
3	16EE7DCPE2	Power Electronics-II	3	0	1	0	**4**
4	16EE7DEXXX	Department Elective – II	3	0	0	0	**3**
5	16XX7GE2XX	Cluster Elective – II	3	0	0	0	**3**
6	16XX7IE1XX	Institutional Elective – I	3	0	0	0	**3**
7	16EE7ESPW1	Project - I	0	0	4	0	**4**
Total			**18**	**1**	**6**	**0**	**25**

VIII Semester Scheme

Sl. No.	Course Code	Course Title	Credits				
			L	T	P	S	Total
1	16EE8DCPET	Professional Practices in Electrical Engineering Technology	1	0	0	2	**3**
2	16XX8IE2XX	Institutional Elective	3	0	0	0	**3**
3	16EE8GCPMF	Project Management and Finance	1	0	0	2	**3**
4	16HSXGEXXX	HSS Elective Course/ NSS/NCC/Yoga/Sports/Foreign Language/ Performing Arts	0	0	2	0	**2**
5	16EE8ESPW2	Project-II	0	0	10	0	**10**
6	16HSXGCXXX	Soft Skills (Placement training)	0	0	2	0	**2**
7	16EEXGCXXX	Internship/Industrial Training/Technical Seminar/Minor Project	0	0	2	0	**2**
Total			**5**	**0**	**16**	**4**	**25**

Department Elective -I

Sl. No	Course Code	Course Title	Credits				
			L	T	P	S	Total
1	16EE5DE1ES	Embedded System Design	3	0	0	0	3
2	16EE5DE1HD	Design and implementation of Digital Systems using HDL	2	0	1	0	3
3	16EE5DE1CP	C++ for Engineering Applications	2	0	1	0	3
4	16EE5DE1TC	Electrical Installation, Testing, Commissioning and Maintenance	3	0	0	0	3
Total			**10**	**0**	**2**	**0**	**12**

Department Elective- II

Sl. No	Course Code	Course Title	Credits				
			L	T	P	S	Total
1	16EE6DE2UP	Utilization of Electrical Power	3	0	0	0	3
2	16EE6DE2CV	Circuit Design using VLSI	3	0	0	0	3
3	16EE6DE2CS	Communication Systems	3	0	0	0	3
4	16EE6DE2MD	Electric Machine Design	3	0	0	0	3
Total			**12**	**0**	**0**	**0**	**12**

Department Elective- III

Sl. No	Course Code	Course Title	Credits				
			L	T	P	S	Total
1	16EE7DE3HV	HV Engineering	2	0	1	0	3
2	16EE7DE3CN	Computer Communication and Networking	3	0	0	0	3
3	16EE7DE3DP	DSP applications to Power Engineering	3	0	0	0	3
4	16EE7DE3ID	Industrial Drives	3	0	0	0	3
Total			**11**	**0**	**1**	**0**	**12**

Cluster Elective-I (Programs: EC/TC/IT/EE/ML)

Sl. No.	Course Code	Course Title	Credits				
			L	T	P	S	Total
1	16EE6GE1EM	Electrical & Electronic Engineering Materials	3	0	0	0	**3**
2	16EE6GE1EC	Electromagnetic Compatibility (Except EC and IT)	3	0	0	0	**3**
3	16EE6GE1CT	Modern Control Theory (Except EE)	3	0	0	0	**3**
Total			**9**	**0**	**0**	**0**	**9**

Cluster Elective-II (Programs:EC/TC/IT/EE/ML)

Sl. No.	Course Code	Course Title	Credits				
			L	T	P	S	Total
1	16ES7GE2PQ	Electrical Power Quality	3	0	0	0	**3**
2	16ES7GE2RE	Renewable Energy Technologies	3	0	0	0	**3**
3	16ES7GE2PL	PLC and SCADA (Offered by EE and IT)	3	0	0	0	**3**
Total			**9**	**0**	**0**	**0**	**9**

NOMENCLATURE FOR THE COURSE CODE

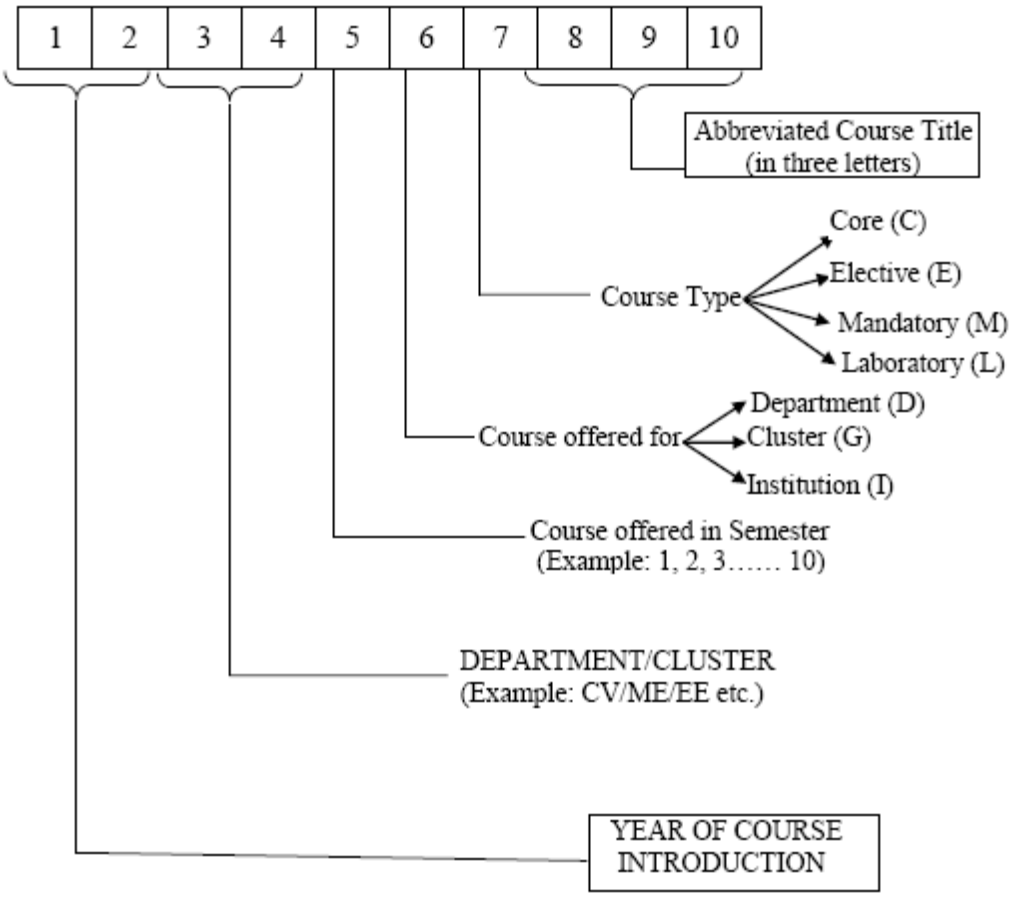

V Semester Syllabus

Course Title	TRANSMISSION AND DISTRIBUTION				
Course Code	16EE5DCTND	Credits	3	L-T-P-S	3-0-0-0
CIE	50 Marks (100% weightage)	SEE	100 Marks(50% weightage)		

Pre-requisites:

Knowledge of Basic Electrical Engineering, Field Theory

Course Description:

This course discusses insulators used for the overhead lines along with the string efficiency and methods to improve it, mechanical design of transmission lines including the sag and tension calculations, wind and ice loadings, insulated cables including the grading and calculation of capacitances in single core and three core cables, The fundamental concepts and detailed calculations of line parameters such as inductances and capacitances, performance analysis of the overhead lines with different equivalent models used for the calculation of regulation and efficiency, types of distributors and grounding system.

UNIT-I		9 hours

Typical Transmission & Distribution systems scheme- Standard voltages for generation, transmission and distribution. Advantages of high voltage transmission. Feeders, distributors &service mains. Mechanical design of Transmission Lines- Types of conductors, conductor materials , Calculation of sag in conductors i) At equal supports ii) At different level supports. Effect of ice covering and wind pressure, factors affecting sag. Overhead Line Insulators-Types of insulators, potential distribution over a string of suspension insulators. String efficiency & methods of improving string efficiency.

UNIT-II		7 hours

Underground cables- General construction of a cable, types of cables, material used, expression for insulation resistance, dielectric stress, power factor, capacitance, charging current of a single core power cable, grading of cables, capacitance grading & inter sheath grading, measurement of capacitance of a three core cable, determination of maximum current carrying capacity of cables.

UNIT-III		8 hours

Line parameters-Calculation of inductance of single phase, 3 phase line with equilateral & unsymmetrical spacing (transposed), calculation of capacitance of a single phase line, 3 phase line with symmetrical and unsymmetrical spacing (transposed) without considering the effect of

earth on transmission line capacitance.		
UNIT-IV		**8 hours**
Performance of power transmission lines- Classification of lines, Short Transmission lines, medium Transmission lines - nominal T method, nominal π method and long transmission lines – Rigorous solution method, ABCD constants of Transmission lines, calculation of voltage regulation and transmission efficiency.		
UNIT-V		**7 hours**
Distribution systems- Classification, radial distribution systems, ring distribution system, DC distribution system with concentrated loads and uniform loading, AC distribution. **Earthing -**Basic terms of earthing, methods of neutral grounding.		
Text books:		
1	Electrical Power Transmission and Distribution- S.Sivanagarajuand S.Satyanarayana, Pearson Education.	
2	Transmission and Distribution of Electrical Power - J.B.Gupta, S.K.Kataria and sons.	
Reference books:		
1	Elements of Power System Analysis- W.D. Stevenson, Mc.Graw - Hill. Comp.Ltd.	
2	Electric power generation Transmission & Distribution- Dr. S. N. Singh, PHI learning Ltd, New Delhi, 2nd Edition.	
3	Electrical Power Systems- C.L.Wadhwa, New Age International publishers, 6th Edition.	
E Books:		
1	NPTEL courses in Electrical Engineering :Power system generation, Transmission& distribution: Video Lecture Numbers:10,11,12,13,18,19,20,23 by Prof .D. P. Kothari, Centre for Energy Studies ,IIT New Delhi.	

Course outcomes At the end of the course, the student will have the ability to
CO1: Select a suitable insulator & design the transmission line for the required sag.
CO2: Develop mathematical models of the transmission line with different configurations and determine the parameters
CO3: Develop network models of different types of transmission lines and assess their performance.
CO4: Analyze and distinguish different distribution system topologies, underground cable grading and earthing types and their basis for selection.

Course Title	ELECTRICAL MACHINES I				
Course Code	16EE5DCMC1	Credits	6	L-T-P-S	3-0-1-2
CIE	50 Marks (100% weightage)	SEE	100 Marks(50% weightage)		

Pre-requisites:
Electromagnetism, Fundamentals of single phase and three phase ac circuits, basic concepts and operation of Transformers and Three phase Induction motors.

Course Description:

This course provides a basic understanding of AC machinery fundamentals,constructional features,operational analysis through phasor diagrams, equivalent circuits,determination of performance parameters, testing and applications.

UNIT-I		8 hours

Transformers

Single Phase Transformers: Ideal transformer- on No Load, on load,{Voltage Current ratios and Vector diagram}, Resistance and leakage reactance, Practical transformer - vector diagram of practical transformer on load, Lumped parameters, Equivalent Circuit model of a transformer-Approximate and simplified, Efficiency and Voltage regulation, Predetermination of efficiency, Voltage regulation and equivalent circuit analysis of single phase transformers by O.C and S.C. test, Sumpner's test.

Parallel operation of two single phase transformers and load sharing, Auto transformer. Output Equation of single phase transformers, area of iron and copper, number of turns

UNIT-II		8 hours

Three Phase Transformers and Fundamentals of rotating AC machines

a) Three Phase Transformers - Three phase transformer connections – star-star, star-delta, delta-star, delta-delta, open delta (V-V), choice of three phase transformer connection, Scott connection-3 phase to 2phase and vice-versa.

b) AC armature windings -Terminology and Types, Winding factors, EMF generated, MMF distribution, slot harmonics, Concept of rotating magnetic field (Mathematical proof) in poly phase AC machines, Production of torque- electromagnetic and reluctance torque.

UNIT-III		9 hours

Three phase Induction Motor - Principle of operation-slip, frequency of rotor current/EMF, speed of rotor field, rotor EMF, rotor current and power factor. Rotor Torque - Expression for

rotor torque, starting torque, Full load torque, pull out torque, Torque - slip curve, Factors affecting rotor torque and slip.

Losses and power flow in three phase Induction motor- rotor output and motor torque, synchronous watt. Equivalent circuit model - Electrical equivalent of mechanical load, relation between rotor input and rotor cu-loss, Phasor diagram of three phase Induction motor. Comparison of three phases IM and Transformer.

Main dimensions of three phase IM, Separation of D and L, Length of air gap

UNIT-IV		**9 hours**

Tests on Three Phases IM- Stator resistance test, no load test, voltage ratio test, Blocked rotor test, Heat run test. Measurement of slip – Stroboscopic method, Circle diagram – construction and predetermination of performance (efficiency, slip , torque, power factor, current, at any given load and at maximum conditions), factors affecting performance of three phase Induction motor, cogging and crawling. High torque cage motors – Deep bar cage rotor motor, double cage rotor motor. Applications of three phase Induction motor, Induction Generator.

UNIT-V		**5 hours**

Fractional HP AC motors

Introduction to single phase Induction motors, construction – stator, rotor and windings, Working principle, Double revolving field theory, Equivalent circuit of single phase Induction motor, Starting methods - Split – phase, shaded pole type, applications, Universal motor, Repulsion motor.

Laboratory Experiments :

OC and SC test on single phase transformer, Direct load test on single phase transformer, Parallel operation of two dissimilar single phase transformers, Sumpner's test, Three phase connection of three single phase transformers, Scott connection for balanced and unbalanced two phase upf loads, Load test on single phase induction motor, No Load and blocked rotor test on three phase induction motor, Speed control of three phase induction motor – Rotor resistance control

Text books:

1	Theory and performance of Electrical Machines- J.B. Gupta, S.K. Kataria and sons-New

	Delhi.
2	Electrical Machinery,Dr. P.S. Bhimbra, , Khanna Publications, 7th Edition, 2007.
Reference books:	
1	Electric Machines – Ashfaq Husain, Dhanpatrai and Co. , Second Edition.
2	Performance and Design of Alternating Current Machines,M. G. Say, John Wiley and Sons Publications, 3 rd Edition
3	A Course in Electrical machine design, A. K. Sawhney, DhanpatRai and Sons
E Books:	
1	http://nptel.ac.in/courses/108105017/
2	http://nptel.ac.in/courses/108106072/
Course Outcomes: At the end of the course, the student will have the ability to	
CO1: Sketch and describe the constructional details and operating principles of Transformers and Induction Motors.	
CO2: Analyze the performance of Transformers and Induction Motors using phasor diagrams and circuit model of machines	
CO3: Select appropriate AC machine for a specified application and justify the selection.	

Course Title	ELECTRICAL ENERGY SYSTEMS				
Course Code	16EE5DCENS	Credits	3	L-T-P-S	3-0-0-0
CIE	50 Marks(100% weightage)	SEE	100 Marks(50% weightage)		

Prerequisites:

Basic Electrical Engineering

Course Description:

This course focuses on the current energy scenario in the country and the role of conventional & non –conventional energy sources. The operation of different conventional power plants, working of solar photovoltaic and wind energy systems and their importance, types of cost structure and hence tariff for power generation are dealt with. The necessity of power factor improvement to reduce load, plant capacity and cost of power are covered. Types of substation and bus bar arrangement schemes for power transmission and their location, environmental impact and viability issues are also addressed.

UNIT-1		5 hours

Sources of Electrical Power

Conventional and nonconventional sources-Introduction, world energy futures, Energy sources and their availability, Energy scenario in India, Combined heat and power distributed generation.

UNIT-2		12 hours

Detailed study of conventional sources

Selection of site, classification, general arrangement and operation of Hydro thermal and Nuclear power stations.,

UNIT-3		7 hours

Non-conventional sources

Solar electric Power Generation: Solar photovoltaics, solar cell principles, Conversion efficiency and power output, Basic photovoltaic system for power generation, solar photovoltaic

arrays and connecting arrangements Wind: Basic principle of wind energy conversion systems and components, nature of wind, wind survey in India. Introduction to Bio mass conversion. Introduction to micro hydel systems.

UNIT-4		**8 hours**

Economic aspects

Introduction, terms commonly used in system operation. Diversity factor, load factor, plant capacity factor, plant use factor, load duration curve. Power factor improvement and tariffs. Energy-load curve.

UNIT-5		**7 hours**

Substations

Introduction, types, Bus bar arrangement schemes, location, Substation equipment. Reactors and capacitors Current limiting reactors.

Energy and Environment- Environmental impact of power plants and social issues of concern - Sulfur oxides, nitrogen oxides, ozone, acid rain, ashes, carbon dioxide, radioactive releases Introduction to smart grid: Major difference between conventional and smart grid. Energy efficiency of various conventional and non – conventional conversion systems.

Text books:

1	Power System Engineering, A. Chakrabarti, M. L. Soni, and P.V. Gupta, U.S. Bhatnagar, DhanpatRai and Co., New Delhi. (T1)
2	Non-conventional Energy Sources**,** G D Rai, Khanna Publishers (T2)

Reference books:

1	Electrical Engineering: An introduction, El – Sharkawi, CRC Press.(R1)
2	Electric Power Generation, Transmission and Distribution**,** Dr. S. N. Singh, P.H.I., New Delhi.(R2)
3	Electrical Power Generation**,** Prof.B.N.Yoganarasimhan (R3)

E Resources:

1.	https://www.google.co.in/url?sa=t&rct=j&q=&esrc=s&source=web&cd=4&cad=rja&uact=8&ved=0ahUKEwjf2IXfwfTMAhUGr48KHQY4D2UQFggvMAM&url=http%3A%2F%2Fwww.theiet.org%2Ffactfiles%2Fenergy%2Fsmart-grids-page.cfm%3Ftype%3Dpdf&usg=AFQjCNE7w-9jRar-0rDoUDIxfs07KbWWvw&bvm=bv.122676328,d.c2I

2.	https://beeindia.gov.in/sites/default/files/1Ch1.pdf

Course outcomes At the end of the course,the student will have the ability to
CO1:Interpret the data available on the nation's energy scenario, distinguish the contributions of conventional and non-conventional sources and co-generation units in power plants.
CO2:Describe the operation of different kinds of conventional and non-conventional energy resources and assess their environmental impact and viability in different social situations
CO3:Evaluate various factors that contribute to the economic operation and efficient management of Energy systems.
CO4:Compare, choose amongst the various types of substations for a specified location and justify.

Course Title	DIGITAL SIGNAL PROCESSING (EE only)				
Course Code	16EE5DCDSP	Credits	06	L-T-P-S	3-0-1-2
CIE	50 Marks(100% weightage)	SEE	100 Marks(50% weightage)		

Prerequisites:

Signals and Systems, Electric Circuit Analysis, Control systems

Course Description:

The course covers topics on various analysis of discrete-time signals in the frequency domain, design and realization of finite impulse response and infinite impulse response digital filters, basics of multi-rate signal processing, application of processing techniques to audio,ecg, speech and electrical signals.The laboratory experiments are closely coordinated with each unit.

UNIT-I		7 hours

Introduction to DSP, Signal Sampling and reconstruction: Practical considerations, Discrete Fourier Transform(DFT) Formulae, Useful properties of DFT:Linearity, Circular shift, Multiplication by a complex exponential sequence, properties of even and odd parts of x[n]. Multiplication,Parseval'srelation, Circular convolution in the time domain, use of tabular arrays &circular arrays.

UNIT-II		8hours

Use of DFT in Linear filtering, Linear convolution of two finite duration sequences, overlap add and save methods,Relation between DFT and other transforms, Radix 2 Fast Fourier Transform(FFT) algorithm for DFT computation, decimation in time algorithm, Decimation in Frequency algorithms.Computational efficiency, Radix 2 FFT algorithm for computation of Inverse Discrete Fourier transform (IDFT),Signal Spectrum: Computation of Amplitude,Phase and Power Spectrum.

UNIT-III		10hours

Basic types of filtering ,Realization of Digital Filters: Direct Form-I,Direct Form-II, Cascade and Parallel representation, realization of Infinite Impulse Response (IIR) systems: Direct form ,Parallel form, Cascade form, Introduction to IIR filters, Pole zero placement method for simple IIR Filters,Second order band pass and band stop,First order low pass, high pass filter designs, Transformation Design Method: Analog Filters using low pass prototype

transformation,Frequency Warping, Design procedure. Digital Butterworth Filter design.		
UNIT-IV		**8 hours**
Realization of Finite Impulse Response (FIR)systems Transversal form, Linear Phase Form, Introduction To FIR filters, Design of FIR by Window method: Rectangular, Triangular, Hanning, Frequency sampling design method.		
UNIT-V		**6 hours**
Multirate signal processing basics, application of filters in heart rate detection using electro cardiography, speech noise reduction, processing for various measurements in power systems.		
Lab Experiments: Study of various types of discrete time signals and analysis of the sampling effect in their processing, Discrete Fourier Transform (DFT) and Fast Fourier Transform (FFT) algorithms for computation of DFT, Frequency domain analysis: Verification of DFT properties, determination of power and phase spectrum of signals, Implementation of various operations such as circular convolution, block convolution,multi-rate signal processing on discrete time signals. Design and implementation of digital filters.		

Text books:

1	Digital signal Processing- Fundamentals and Applications, Li Tan, Published by Reed Elsevier, India Private Limited, New Delhi-110065,2008.
2	Digital Signal Processing – Principles, Algorithms & Applications, John G. Proakis & Dimitris G.Manolakis, Pearson education / Prentice Hall,Fourthedition, 2007.

Reference books:

1	Fundamentals of Digital Signal Processing, Lonnie C. Ludeman,Jon Wiley & Sons,1987.
2	Discrete Time Signal Processing, Pearson Education, Alan V.Oppenheim, Ronald W. Schafer &Hohn. R.Back2nd edition, 2005.
3	Power Systems Signal Processing for Smart Grids,Paulo Fernando Ribeiro, Carlos Augusto Duque, Paulo MarcioRibeiro, Augusto Santiago Cerqueira,Wiley, December 2013.

E Books:	
1	The Scientist and Engineer's Guide to Digital Signal Processing By Steven W. Smith, Ph.D.
2	Digital Signal Processing Principles, Algorithms, and Applications John G. Proakis Northeastern University Dimitris G. Manolakis, Third Edition
MOOCS:	
1	https://www.mooc-list.com/course/applied-digital-signal-processing-dit?static=true
2	Sign up at http://www.coursera.org/course/dsp

Course Outcomes:

At the end of the course ,the student will have the ability to

CO1: Apply Discrete Fourier transforms for different types of signals, interpret the information obtained and reconstruct.

CO2: Analyze discrete parameter signals and their transforms for their behaviour.

CO3: Design and demonstrate application of linear system analysis to engineering problems.

Course Title	MEASUREMENTS AND INSTRUMENTATION				
Course Code	16EE5DCMNI	Credits	3	L-T-P-S	3-0-0-0
CIE	50 Marks(100% weightage)	SEE	100 Marks(50% weightage)		

Prerequisites:

Basic Electrical Engineering

Course Description:

This course covers description of different types of bridges used for measurement of resistance, inductance & capacitance, instruments used for the measurement of power, power factor, energy & frequency, instrument transformers used in ac measurement, construction,operation& applications of Crompton's DC potentiometer, operation of digital voltmeters &types of waveform generators, selection of transducers based on the application.

UNIT-I		8 hours

Measurement of Resistance -Wheatstone's bridge, sensitivity, limitations, Kelvin's double bridge, Fall of potential method. Measurement of inductance &capacitance , Sources& detectors, Maxwell's inductance bridge, Maxwell LC bridge, Anderson's bridge, Desauty's bridge, Schering bridge, Errors in AC bridges & methods of minimization.

UNIT-II		8hours

Measurement of Power, Energy, Power factor & Frequency meter - Review of construction & operation of Dynamo meter wattmeter & Induction type energy meter, errors in wattmeter,LPF wattmeter, errors & adjustments in single phase energy meter, construction & operation of single phase dynamometer type power factor meter ,Weston frequency meter.

UNIT-III		7 hours

Extension of instrument ranges - Construction & theory of instrument transformers, expression for ratio error & phase angle error in CT, causes of errors & means to reduce errors in CT.
DC Potentiometer: Construction & operation of Crompton's type dc potentiometer,Applications of dc potentiometer.

UNIT-IV		**8 hours**
Electronic instruments - Block diagram & working of Ramp type DVM, Integrating type DVM,Servo balancing type DVM, AF Sine & square wave generator, Function generator, Field strength meter.		
UNIT-V		**8 hours**
Transducers - Classification of transducers, selection factors, operation of Potentiometric Transducer, LVDT, Strain gauges, Temperature transducers, Piezoelectric transducer.		

Text books:	
1	Electronic instrumentation-H.S.Kalsi, TMH Education Private limited, New –Delhi. 3rd edition,
2	A Course in Electrical & Electronic measurements & instrumentation-A.K.Sawhney, DhanpatRai& Co(Pvt) limited, New –Delhi.Nineteenth revised edition 2011,
Reference books:	
1	Modern Electronic instrumentation & measurement Techniques-William.D. Cooper& A.D.Helfrick, Pearson Education. First edition 2015,
2	Electronic instrumentation & measurements-David.A.Bell**,** Oxford University. 3rd edition 2013
E Books:	
1	http://www.free-engineering-books.com/2013/05/electronic-instrumentation-and.html.

Course outcomes At the end of the course, the student will have the ability to
CO1: Identify& select suitable bridges for the measurement of electrical circuit parameters.
CO2: Distinguish the concept behind the operation of analog & digital instruments for the measurement of electrical circuit parameters.
CO3: Select and justify the choice of asuitable transducerfor an application.

Course Title	Measurements and control systems Lab				
Course Code	16EE5DCMCL	Credits	01	L-T-P-S	0-0-1-0
CIE	50 Marks (100%weightage)	SEE	50 Marks(50% weightage)		

Part A Experiments	
1.	To Measure (a) Medium resistance by Wheatstone bridge (b) Low resistance by Kelvin's Double Bridge (c) High Resistance by Megger
2.	Measurement of Inductance and Capacitance by (a) A-V-W Method (b) Three Voltmeter Method.
3.	Measurement of Inductance and Capacitance using A.C Bridges.
4.	To measure the variation in speed of a dc servomotor in terms of voltage and frequency using an optical sensor and a frequency to voltage converter.
5	Using Matlab/Simulink create transfer functions, state space models, change from state space to transfer function models and vice versa, Build systems with unity and non unity feedback and obtain their step response
6.	Computing poles and zeros of a system described by higher order polynomialsand vice versa,visualize the effect of changes in poles and zeros of a transfer function on the system response, mesh plots.Comparison of step and impulse responses of systems.
7.	Create and analyze root locus plots. Design by means of root locus plots.
8.	Simulation of PID control using Simulink and experimental verification on a second order system.
9.	Design a passive RC lag compensating network for the given specifications,viz, the maximum phase lag and the frequency at which it occurs and to obtain its frequency response.Verify experimentally the frequency response of the above lag compensating network.
10.	Design a passive RC leadcompensating network for the given specifications,viz,the maximum phase lead and the frequency at which it occurs and to obtain its frequency response.Verify experimentally the frequency response of the above leadcompensating network.

Course Title	EMBEDDED SYSTEM DESIGN (Department Elective I)				
Course Code	16EE5DE1ES	Credits	3	L-T-P-S	3-0-0-0
CIE	50 Marks(100% weightage)	SEE	100 Marks(50% weightage)		

Prerequisites:

Microcontrollers

Course Description:

The course gives an insight to the fundamental concepts related to hardware and software designing of embedded systems inculcating the salient topics such as processor and memory organisation along with case studies, real time operating systems (RTOS), an overview of the various scheduling algorithms, peripheral interfacing . The latter part comprises introduction, architecture and basic assembly level programming of PIC microcontroller, Timers, Interrupts handling, ADC and DAC using PWM.

UNIT-I		7 hours

Concept Of Embedded System Design - Definition, internal block diagram and components, classification, skills required,Embedded software in a system, design process in embedded systems, design metrics, challenges in Embedded system design. Examples of embedded systems: Automatic chocolate vending machine and smart card.

UNIT-II		7hours

Processor and Memory Organization - Processor and memory organization, Princeton and Harvard architecture, Instruction –Level parallelism: pipelined and superscalar units, Memory types, memory maps and addresses, processor selection and Memory selection (including two case studies for each)

UNIT-III		9hours

Real Time Operating System(RTOS) And Scheduling Algorithms

Introduction to RTOS, fundamental requirements of RTOS, real time kernel types, schedulers, various scheduling algorithms with examples, latency (interrupt latency, scheduling latency and context switching latency), tasks, state transition diagram, task control block. Inter-task communication and synchronization of tasks.

UNIT-IV		7 hours

Devices And Peripheral Interfacing - I/O types and examples, serial communication devices, parallel device ports, parallel port interfacing with switches, keypad,stepper motor, Timer and counting devices, Watch dog timer.

UNIT-V		9hours
Microchip PIC Microcontroller - Introduction to PIC Microcontroller - 16Fxx series, CPU Architecture, Addressing modes, Instruction set, Basic assembly level programming, Timers, Interrupts, ADC,DAC using PWM.		
Text books:		
1	Rajkamal Embedded System Architecture: Programming & Design, TMH Edition, 2007.	
2	John B. Peatman Design with PIC Microcontrollers, Prentice Hall, 1997.	
Reference books:		
1	J. W. Valvano Embedded Microcomputer System: Real time interfacing, Cengage-Engineering, 1st Edition, 2000.	
2	Jane W.S. Liu,Real Time Systems, Prentice Hall, 2000.	
E Resourses:		
1	http://nptel.ac.in/courses/Webcourse-contents/IIT%20Kharagpur/Embedded%20systems/New_index1.html	
2	http://nptel.ac.in/courses/108102045/	

Course outcomes At the end of the course ,the student will have the ability to
CO1: Design an embedded system as solution to real time problems applying the knowledge of processor, memory and peripheral interfacing techniques.
CO2: Analyze schedulers, scheduling algorithms, latencies, task, and synchronization of tasks for real time embedded systems.
CO3: Realize a RISC Microcontroller and apply the knowledge of programming to develop small scale embedded applications.

Course Title	**Design and Implementation of Digital Systems using HDL (Department Elective I)**				
Course Code	**16EE5DE1HD**	**Credits**	**03**	**L-T-P-S**	**2-0-1-0**
CIE	**50 Marks(100% weightage)**	**SEE**	**100 Marks(50% weightage)**		

Prerequisites:

Digital Electronics

Course Description:

This course deals with the study of programming language for the design and implementation of the Digital Electronic systems. Two major styles, namely, VHDL and Verilog are dealt with.

UNIT-I		**4 hours**

Introduction: Why HDL, Structure of HDL Module, Operators, Data types, Brief comparison of VHDL and Verilog.

UNIT-II		**7 hours**

Data – Flow Descriptions: Highlights of Data – Flow Description, Structure of Data – Flow Description, Data Type – Vectors. Dataflow descriptions (Both VHDL & Verilog) of Half adder, 2*1 MUX, 2*2 unsigned array multiplier, D-Latch, 2-Bit magnitude comparator, 3 – Bit ripple carry adder & carry look ahead adder.

Behavioral Descriptions: Behavioral Description highlights, Structure of HDL behavioral Description, VHDL variable – assignment statement, sequential statements. Behavioral descriptions (VHDL & Verilog) of 2*1 MUX, D-Latch, Edge triggered JK Flip flop, 3-Bit Binary counter, Booth Algorithm.

UNIT-III		**6 hours**

Structural Descriptions: Highlights of structural Description, Organization of the structural Description, Binding, Generate, Generic and parameter statements. Structural Descriptions (VHDL & Verilog) of Half Adder, 2*1 MUX, 2*4 Decoder, Full adder, SR-Latch, Master Slave D – Flip flop & JK – Flip flop. Application of structural description to implement SRAM Cell.

N – Bit Magnitude comparator & N-Bit Asynchronous down counter using Generate statements.		
UNIT-IV		**5 hours**
Procedures, Tasks and Functions: Highlights, Procedures and tasks, Functions.HDL Description of Full adder, N-Bit Ripple Carry adder, data type conversions using Procedures and tasks, Functions to find Greater of two numbers.		
UNIT-V		**4 hours**
Synthesis Basics: Highlights of Synthesis, Synthesis information from Entity and Module, Mapping Process and Always in the Hardware domain **Applications:** Interfacing programs –Seven Segment Display, Waveform generation: ramp, square, triangular.		
Lab Experiments: VHDL & Verilog programs to realize the following using Xilinx ISE Design Suite software: Basic gates, Half & Full adder, Half & Full subtractor, Binary to Gray code conversion.,4:1 MUX, 2:4 Decoder, 2*2 Combinational array multiplier, Priority Encoder, D-Flip flop, JK – Flip flop,Booth Algorithm, 3 – Bit Binary up counter & down counter ,Interfacing programs.		
Text books:		
1	"HDL Programming - VHDL and Verilog", Nazeih M Botros, Dreamtech Press, 2006 Edition, reprint 2009.	
Reference books:		
1	"Verilog HDL – A Guide to Digital Design and Synthesis",Samir Palnitkar, Pearson Education, Second Edition.	
2	"VHDL – Programming by example", Douglas Perry, TMH, Fourth Edition.	
3	"Circuit Design with VHDL",Volnei A Pedroni, PHI, Second Edition.	
Course outcomes At the end of the course,the student will have the ability to		
CO1: Apply digital electronics engineering fundamentals to identify, formulate and analyse various digital systems.		

CO2: Design hardware/software systems using appropriate modelling techniques within certain constraints such as cost.
CO3: Test and interpret the data through experiments using modern IT tools.

Course Title	**C++ for Engineering Applications (Department elective I)**				
Course Code	**16EE5DE1CP**	**Credits**	**3**	**L-T-P-S**	**2-0-1-0**
CIE	**50 Marks(100% weightage)**	**SEE**	**100 Marks(50% weightage)**		

Prerequisites:

Basic principles of programming concepts

Course Description:

The course deals with applying the concepts of OOPs to C++ as an example language. The course gives introduction to basic concepts of C++ programming (including data types, operators, selections, loops, functions and simple I/O syntax), Advanced topics such as classes, objects, data abstraction, data encapsulation, overloading, inheritance, polymorphism and reusability, templates, exceptions and file handling concepts are also dealt with. Application of programming in C++ for realization of digital circuits, steady state and transient analysis of electrical networks are covered.

UNIT-I		**5 hours**

Principles Of Object Oriented Programming - Basic Concepts of OOPS, OOP Languages, Pre-processors directives and header files, Beginning with C++: Definition , structure of C++ program, compiling and linking, Tokens, expressions and control Structures: Tokens, keywords, identifiers and constants, datatypes, symbolic constants, variables, operators, manipulators, control and statement loops.

UNIT-II		**5 hours**

Functions In C++: Introduction, Main function, function prototype,call by reference,return by reference, inline functions, function overloading, friend and virtual functions.

Classes and objects: Specifying a class, memberfunctions, arrays within a class,static data members and member functions, arrays of objects, returning objects

UNIT-III		**5hours**

Constructors And Destructors - Constructors, parameterized constructors, multiple constructors in a class, copy constructor, dynamic constructors and destructors.Operator overloading and type conversions: Overloading unary and binary operators, overloading using friends, rules of overloading.

UNIT-IV		**5 hours**

Inheritance - Introduction, defining derived classes, Types of inheritance: Single, multilevel, multiple, hierarchical, hybrid.Pointers,virtual and polymorphism: Pointers,pointers to objects,this pointer, pointers to derived classes,virtual functions.

Managing console I/O operations:C++ streams,C++ stream classes, unformatted and formatted I/O operations.

UNIT-V		**6 hours**

Templates And File Handling
Templates: Class templates, Function templates
Exception handling: Basics, Throwing and catching mechanisms, rethrowing an exception.
File operations: Introduction, classes for file stream operations, Opening and closing afile:opening files using constructors, detecting end-of-file.

C++ for Electrical and Electronics engineering concepts –
C++ programming for digital circuits, AC circuits, steady state and transient analysis of electrical networks.

Lab Experiments:
CPP programs based on operators,manipulators,control and statement loops, CPP programs based on functions, function overloading, friend and virtual functions, CPP programs based on classes, arrays and objects, CPP programs on constructors, destructors and operator overloading, CPP programs on Pointers , CPP programs on templates and file operations, CPP programs for digital circuits and AC circuits, CPP programs for steady state and transient analysis of electrical networks.

Text books:

1	Object oriented Programming with C++, E Balaguruswamy ,TMH publications 4th edition.

2	Let us C++ -Yashvanth P Kanetkar ,BPB Publications.
Reference books:	
1	Object oriented Programming with turbo C++ - Robert Lafore ,GALGOTIA Publications.
2	Programming with C++ -Schaum's series ,TMH Publications.
E Books:	
1	http://ocw.mit.edu/courses/electrical-engineering-and-computer-science/6-00-introduction-to-computer-science-and-programming-fall-2008/video-lectures/lecture-14/ [Video lectures and transcripts on Object oriented programming by MIT]
2	Programming in C++ for Engineering and Science, Larry Nyhoff, CRC press, Taylor & Francis Group.

Course outcomes At the end of the course,the student will have the ability to
CO1: Apply the basic concepts of C++ programming in developing the code for various Operations
CO2: Write C++ programs using salient features of OOPs such as Classes, Objects, Data Abstraction, Data encapsulation, Overloading, Inheritance,Polymorphism and file handling concepts for various applications.
CO3: Develop C++ programs for Electrical and Electronics Engineering applications.

Course Title	**ELECTRICAL INSTALLATION, TESTING, COMMISSIONING AND MAINTENANCE (Department Elective I)**				
Course Code	**16EE5DE1TC**	**Credits**	**3**	**L-T-P-S**	**3-0-0-0**
CIE	**50 Marks(100% weightage)**	**SEE**	**100 Marks(50% weightage)**		

Prerequisites:

Electrical Machines, Basic Electrical Engineering

Course Description:

The course covers topics on general principles of cost estimation of electrical installations, electrical design for residential and commercial buildings, testing of transformers and induction motor.

UNIT-I		**8hours**

General principles of estimation - Introduction to estimation & costing, Electrical schedule. Catalogues, Market survey and source selection. Recording of estimates, determination of required quantity of material, Labor conditions. Determination of cost material and labor contingencies. Overhead charges, profit, purchase system, purchase enquiry and selection of appropriate purchase mode. Comparative statement, purchase orders, payment of bills. Tender form, general idea about IE rule, Indian Electricity Act and major applicable I.E rules.

UNIT-II		**8 hours**

Residential and commercial building electrification - General rules guidelines for wiring of residential installation and positioning of equipment's**,** principles of circuit design in lighting and power circuits, procedures for designing the circuits and deciding the number of circuits, method of drawing single line diagram. Selection of type of wiring and rating of wires and cables. Load calculations and selection of size of conductor, Selection of rating of main switch. Distribution board, protective switchgear ELCB and MCB and wiring accessories, Earthing of residential Installation, Sequence to be followed for preparing estimate, Preparation of detailed estimates and costing of residential installation.

Concept of commercial installation, Differentiate between electrification of residential and commercial installation.

UNIT-III		7 hours

Electrical installation for power circuits - Introduction, important considerations regarding motor installation wiring, determination of input power, determination of input current to motors, determination of rating of cables. Determination of rating of fuse, determination of size of conduit, distribution board main switch and starter.

UNIT-IV		8hours

Testing of transformers - Specifications: Power and distribution transformers as per BIS standards.Installation: Location, site, selection, foundation details (like bolts size, their number, etc), code of practice for terminal plates, polarity & phase sequence, oil tanks, drying of windings and general inspection.

Specific Tests: Determination of performance curves like efficiency, regulation etc, and determination of mechanical stress under normal &abnormal conditions.

UNIT-V		8 hours

Induction Motors - Specifications for different types of motors, Duty, I.P. protection.

Installation: Location of the motors (including the foundation details) & its control apparatus, shaft & alignment for various coupling, fitting of pulleys & coupling, drying of windings.
Electrical Tests: Insulation test, earth resistance, high voltage test, starting up, failure to speed up to take the load, type of test, routine test, factory test and site test (in accordance with ISI code)

Text books:

1	Electrical Installation Estimating & Costing, J.B.Gupta, S.K. Katria& Sons New Delhi, VIII Edition
2	Electrical estimating and energy management, K.RgangadharaRao, Sapna. Publications.
3	Testing & Commissioning of Electrical Equipment -S. Rao,Khanna Publishers,2004

Reference books:

1	Electrical Design Estimating and Costing, K.B.Raina, S.K.Bhattacharya, New Age International
2	Electrical Wiring Estimating and Costing, S.L.Uppal, G.C Garg, Khanna Publishers, Delhi.

3	A Handbook on Operation and Maintenance of Transformers- H. N. S. Gowda, Published by H. N. S. Gowda,2006

Course Outcomes:
At the end of the course ,the student will have the ability to

CO1: Apply Indian Electricity Rules and Regulations for design of electrical systems.

CO2: Design electrical systems as per the requirements for residential and commercial purposes

CO3: Test and install electrical apparatus and HVAC systems for commercial and industrial applications

CO4: List the conditions for Install of electrical equipments

VI Semester Syllabus

Course Title	POWER SYSTEMS I				
Course Code	16EE6DCPS1	Credits	4	L-T-P-S	3-1-0-0
CIE	50 Marks(100% weightage)	SEE	100 Marks(50% weightage)		

Prerequisites:

Transmission and Distribution, Electrical Energy Systems

Course Description:

This course covers various techniques for analysis of different types of faults occurring in the Power System. Methods of evaluating Power System Stability are also discussed.

UNIT-I		7 hours

Representation of Power system Components: Circuit models of Transmission line, Synchronous machines, Transformer and load. Single line diagram, impedance and reactance diagram. Per unit system, per unit impedance and reactance diagrams

UNIT-II		8 hours

Formation of Z-bus using building algorithm(Without Mutuals), Symmetrical 3 - Phase Faults: Transients on a transmission line, Short-Circuit currents and the reactance of synchronous machines on load and on no load, fault analysis using Z-bus matrix

UNIT-III		8 hours

Symmetrical components - Resolution of unbalanced phasors into their symmetrical components, Analysis of unbalanced load against balanced Three-phase supply, Analysis of balanced and unbalanced loads against unbalanced 3 phase supply, Phase shift of symmetrical components in star-delta transformer bank, Power in terms of symmetrical components. Sequence impedances and networks of power system elements (alternator, transformer and transmission line) Sequence networks of power systems

UNIT-IV		8 hours

Unsymmetrical faults - L-G, L-L, L-L-G faults on an unbalanced alternator with and without fault impedance. Unsymmetrical faults on a power system with and without fault impedance. Open conductor faults in power system

UNIT-V		8 hours

Stability Analysis- Importance of stability analysis in power system planning and operation, classification of power system stability, Rotor dynamics and the swing equation. Equal area

criterion for transient stability evaluation and its applications	
Text books:	
1	Elements of Power System Analysis, WD Stevenson, McGraw Hill Publications,2nd Edition.
2	Modern Power System Analysis,IJ Nagrath and DP Kothari, Tata McGraw Hill Publications, 3rd Edition
Reference books:	
1	Computer aided Power System Analysis,GL Kusic, CRC Press, 2nd edition
2	Power System Analysis, Hadi Sadat, Tata McGraw Hill Publications, 3rd edition
E-learning:	
1	NPTEL Course titled: Computer Aided Power System Analysis. Link: http://nptel.ac.in/courses/108107028/
Course outcomes At the end of the course ,the student will have the ability to	
CO1 : Model and analyze power systems using complex mathematical transformations under short circuit and unbalanced conditions	
CO2: Analyze different unsymmetrical faults on unloaded alternator and on complex power systems using symmetrical component transformations	
CO3: Apply mathematical techniques to evaluate system stability.	

.

Course Title	ELECTRICAL MACHINES II				
Course Code	16EE6DCMC2	Credits	6	L-T-P-S	3-0-1-2
CIE	50 Marks(100% weightage)	SEE	100 Marks(50% weightage)		

Prerequisites:

Engineering Physics, Basic Electrical Engineering

Course Description:

The course covers construction, operation, testing and control of DC machines and synchronous machines. Performance analysis of DC and synchronous machines both in motoring and generating modes are discussed.

UNIT-I		7 hours

DC machine - Construction, DC armature windings- Terminology and Types, MMF distribution, slot harmonics, Circuit model of a DC machine- generating and motoring modes, Characteristics of generator and motor, Armature Reaction, Commutation. Output equation of a DC machine, specific loadings, Separation of D and L.

UNIT-II		8 hours

Testing and Speed control of DC machines

Power flow in DC machine - Motoring and Generating modes. Testing of DC machines - Direct and indirect methods, predetermination of losses and efficiency by Swinburne's, Hopkinson's and Retardation tests, applications of DC machine. Speed control of DC shunt and DC series motors - Voltage, flux, and armature rheostat control.

UNIT-III		7 hours

Synchronous Machine :

Synchronous generators: Operating Principle, constructional features - revolving field vs revolving armature, stator, salient pole type and non-salient pole type rotor, winding factors , EMF equation, waveshape of EMF induced, armature reaction and its nature in synchronous generators,

Synchronous Motor: Principle of operation, methods of starting, nature of armature reaction in synchronous motors, power flow and efficiency of synchronous motor, Hunting and Damping,

applications of synchronous machines.

Magnetic circuit of three phase synchronous machines, Determination of field ATs of salient and non salient pole machines.

UNIT-IV		**9 hours**

Voltage regulation and methods of synchronization :

Synchronous impedance, OC and SC tests, Voltage regulation, determination of voltage regulation by EMF, MMF and ZPF methods. Slip test on salient pole alternator, voltage regulation of salient pole alternator using X_d and X_q. Need and conditions for parallel operation of alternators, Methods of synchronizing a three phase alternator to bus bars (dark lamp method, bright lamp method, synchronizing transformer, Synchronoscope). Load sharing between two alternators in parallel.

UNIT-V		**8 hours**

Operating characteristics of synchronous machine :

Synchronous machine model, operation in generating and motoring modes, circuit model. Synchronizing current and torque, Expression for power exchanged between busbars and the synchronous machine with and without armature resistance, conditions for maximum power, Power angle characteristics, Effect of change in excitation, effect of change in prime mover input and effect of change in load for both generating and motoring modes.

Lab Experiments:

Swinburne`s test, Hopkinson`s test, Retardation test, Speed control of DC motor by armature rheostatic control , flux control and Ward Leonard method, Voltage regulation of a non – salient pole alternator by EMF, MMF and ZPF method, Slip test, Synchronization of alternators in parallel with bus - bars, V curves of synchronous motor.

Text books:

1	Theory and Performance of Electrical Machines- J.B. Gupta, S.K. Kataria and Sons- New Delhi. [Unit I,II,III,IV]
2	Electrical Machines - I.J. Nagrath, D.P. Kothari, Tata Mcgraw-Hill Publishing Company Limited, New Delhi, Second Edition. [Unit V]

Reference books:	
1	Theory of Alternating Current Machinery- Alexander S. Langsdorf, Tata Mcgraw-Hill Publishing Company Limited, New Delhi, Second Edition.[Methods of synchronization]
2	Electrical Machines – Abhijit Chakrabarti , Sudipta Debnath, Mcgraw Hill Education (India) Private Limited, Newdelhi
3	A Course in Electrical machine design, A. K. Sawhney, DhanpatRai and Sons
E Books:	
1	http://nptel.ac.in/courses/108105017/
2	http://nptel.ac.in/courses/108106072/
Course Outcomes: At the end of the course ,the student will have the ability to	
CO1: Describe the constructional details, principle of operation, characteristics and speed control of DC machines and select DC motors for specific application	
CO2: Evaluate the performance of DC machine by testing them in both generating and motoring modes	
CO3: Describe the constructional details, principle of operation of synchronous machine in generating and motoring modes and their selection for specific application	
CO4: Develop synchronous machine model and evaluate the performance of synchronous machine during parallel operation	

Course Title	Power Electronics – I				
Course Code	16EE6DCPE1	Credits	6	L-T-P-S	3-0-1-2
CIE	50 Marks(100% weightage)	SEE	100 Marks(50% weightage)		

Prerequisites:
Analog microelectronics, Linear Circuit Analysis

Course Description :
The course deals with the principle of operation and characteristics of various switching devices,principle and analysis of operation of power conversion systems such as controlled rectifier circuits, inverters and DC choppers.

UNIT-1		8 hours

Introduction - Applications of Power Electronics, introduction to switching devices: Ideal characteristics, characteristics of practical devices, Power Semiconductor Devices, Control Characteristics of Power Devices, types of Power Electronic Circuits, peripheral Effects. Power Transistors: Power BJTs: Steady state characteristics (Qualitative analysis only). Power MOSFETs: device operation, switching characteristics, IGBTs: device operation, output and transfer characteristics, di/dt and dv/dt limitations.Gate drive circuits:MOSFET /IGBT gate drive, Isolation of gate and base drives.

UNIT-2		6 hours

DC-DC Converters - Introduction, principle of step-down operation and it's analysis with RL load (only CCM mode of operation), and principle of step-up chopper with R load, performance parameters, Chopper/Converter classification (Quadrant classification).

UNIT-3		7 hours

Thyristors - Introduction, thyristor characteristics, Two transistor model, turn on and turn off, di/dt and dv/dt protection. Steady state characteristics of TRIAC, GTO, MCT and IGCT. Thyristor firing circuits, Commutation techniques: Introduction, Natural commutation, Forced commutation: selfcommutation (Qualitative analysis only)

UNIT-4		8 hours

Controlled rectifiers - Introduction, principle of phase controlled converter operation, Single phase fully controlled converters, Single phase semi-converters, Three phase fully controlled

converters (RL load, Continuous current conduction operation only)		
UNIT-5		**10 hours**
Inverters- Introduction, principle of operation, performance parameters, Single phase bridge inverters, Three phase inverters, voltage control of single phase inverters- single pulse width, multiple pulse width and sinusoidal pulse width modulation, Current source inverters.		
Lab Experiments: Static characteristics of SCR, MOSFET and IGBT, Simulation and practical realization of a step up and step down DC-DC converter with R and RL load, digital triggering of SCR circuit,AC voltage control using TRIAC and DIAC combination connected to R load, Simulation and practical realization of a single phase fully controlled converter and semi converter,single phase bridge inverter with R and RL load.		
Text books:		
1	Power Electronics – Circuits, Devices and Applications, Muhammad H Rashid, Prentice – Hall India, Third Edition.	
Reference books:		
1	Power Electronics – Converters, Applications and Design, Ned Mohan, Tore Undeland and William P Robbins, John Wiley &sons , 3rd Edition.	
2	Power Electronics – Principles and Applications, Joseph Vithayathil, TATA McGraw-hill Edition.	
3	Power Electronics, M.D.Singh, K B Khanchandani, TMH ,Second edition.	
E-Resources:		
1	NPTEL Lecture on “Power Electronics” http://nptel.ac.in/courses/108105066/	
2	NPTEL Lecture on “Power Electronics” http://nptel.ac.in/courses/108101038/#	

Course outcomes At the end of the course ,the student will have the ability to
CO1:Identify the need and methods for power conversion and control of electrical energy to match the load requirements
CO2:Analyze and compare the characteristics of an ideal switch with practically available power electronic devices.
CO3:Analyze steady state performance of different types of converters such as AC to DC, DC to AC and DC to DC converters.

Course Title	Modern Control Theory				
Course Code	16EE6DCMCT	Credits	3	L-T-P-S	2-1-0-0
CIE	50 Marks(100% weightage)	SEE	100 Marks(50% weightage)		

Prerequisites:

Basic Electrical Engineering, Linear Circuit analysis, Control systems

Course Description:

This course covers creation of state models using physical variables, phase variables and canonical variables and solution of state equations. It also deals with the various techniques used to analyse the controllability and observability of a system. Basics about nonlinear systems are also dealt with.

UNIT-I		8 hours

State Variable Analysis and Design - Introduction, concept of state, state variables and state model, state modeling of linear systems, linearization of state equations. State space representation using physical variables & canonical variables

UNIT-II		8 hours

Derivation of transfer function from state model, Eigen values, Eigen vectors, generalized Eigen vectors. Solution of state equation ,state transition matrix and its properties, computation using Laplace transformation, power series method, Cayley -Hamilton method

UNIT-III		7 hours

Concept of controllability & observability, methods of determining the same, Effect of Pole-Zero cancellation. Duality.

UNIT-IV		8 hours

Pole placement techniques - Stability improvements by state feedback, necessary & sufficient conditions for arbitrary pole placement, state regulator design, and design of state observer.

UNIT-V		8 hours

Non-Linear systems - Introduction, behavior of non-linear system, common physical non linearity –saturation, friction, backlash, dead zone, relay, multivariable non-linearity. Phase plane method, singular points, stability of nonlinear system, limit cycles, construction of phase trajectories.

Text books:

1	Digital control &state variable methods- M.Gopal,THM Hill , 2nd edition ,2003
2	Control system Engineering- I.J .Nagarath & M. Gopal, New Age International (P)Ltd, 3rd edition

Reference books:

1	State space Analysis of Control Systems- Katsuhiko Ogata- Prentice Hall Inc
2	Automatic Control Systems- Benjamin C. Kuo & Farid Golnaraghi , John Wiley & Sons, 8th edition,2003
3	Modern Control Engineering- Katsuhiko Ogata-PHI 2003
4	Modern control systems-Dorf& Bishop- pearson education,1998

Course outcomes

At the end of the course ,the student will have the ability to

CO1: Create state models using physical variables ,mathematical variables and to solve the state equation

CO2: Apply appropriate techniques to analyze the system for its controllability and observability.

CO3: Apply relevant concepts to design systems with state feedback to meet the specifications; mathematically represent nonlinear systems and analyze a few simple models.

Course Title	UTILIZATION OF ELECTRIC POWER (Department elective II)				
Course Code	16EE6DE2UP	Credits	3	L-T-P-S	3-0-0-0
CIE	50Marks(100% weightage)	SEE	100 Marks(50% weightage)		

Prerequisites:

Principles of DC Motors, Induction Motor and their characteristics

Course Description:

The course imparts knowledge about various types of Electric heating and welding employed in different industrial applications, interior and exterior illumination systems and design of lighting schemes. Traction systems and their behavior, Speed control and Braking of motors used in traction, Power Supply used for traction.

UNIT-I		8 hours

Electric Heating & Welding - Advantages of Electric Heating- Modes of heat transfer- Resistance heating – Infra red heating – Arc furnaces Induction Heating- High frequency eddy current heating- Dielectric heating – choice of frequency Resistance welding – arc welding- Ultrasonic welding- Laser Beam Welding, preparation of work-electrodes- Power supply for arc welding- arc welding with D.C and A.C – circuits used in Resistance welding- Comparison of different types of welding

UNIT-II		6 hours

Illumination - Production of light – Laws of illumination – lighting calculation – Determination of MHCP and MSCP – Interior and exterior illumination systems – Lighting schemes – Design on lighting schemes – Factory lighting – Flood lighting – Electrical lamps – Gaseous discharge lamps – High pressure and low pressure neon Lamps –High frequency , Low pressure discharge tubes, Induction Lamps, LED lamps, Simple problems

UNIT-III		8 hours

Electric Traction - Different types of traction- systems of Electric Traction- Track Electrification- comparison between DC and AC systems of Railway electrification Train movement and Energy Consumption: Typical Speed- Time curves- Factors affecting schedule speed simplified speed-time curve- Mechanics of Train movement-Tractive effort – Power, Energy output from the driving axles- Determination of specific energy output- factors affecting energy consumption, Specific Energy consumption- Dead weight, accelerating weight and adhesion weight- Problems

UNIT-IV		**9 hours**
Electric Traction Motors and Their Control - Introduction – Types of motors and their characteristics used for Electric Drives : D.C. Motors, A.C. Motors, Linear Induction Motor, A.C. Series Motor- Selection of Motors- Starting of D.C. Motors – Speed Control of D.C. Motors, Induction Motors – Heating & Cooling of Electrical Machines –Insulation Materials- Motors for particular Services		
UNIT-V		**8 hours**
Braking of Traction Motors and Power Supply for Traction systems- Regenerative braking- advantages and disadvantages – Calculation of energy returned- Current collector-overhead construction for tramways and trolley buses and railways-sag and tension calculation for trolley wire – substations- their location- Feeding and Distributing Systems- Interference in Telecommunication circuits.		

Text books:	
1	A Course in Electrical Power,Soni Gupta & Bhatnagar, **,**Dhanpat Rai and Sons Unit I,II,III,IV,V
2	Utilisation of Electrical Power, Rajput, R.K., Laxmi Publications, 2008 Unit IV
e-Books	
1	Light Emitting Diodes (Leds) For General Illumination (PDF 72P),http://www.freebookcentre.net/Electronics/Light-Emitting-Diodes PDF | 72 Pages
2	www.edisontechcenter.org/InductionLamps.
Reference books:	
1	Utilization of electric energy, Openshaw Taylor**,** Orient Longman89
2	Electric Power, Uppal S. L., Khanna Publications.

Course outcomes At the end of the course ,the student will have the ability to
CO1: Apply the knowledge of mathematics , science and electrical engineering principles to analyze operation different types of electrical heating gadgets such as ovens and welding equipment.
CO2: Apply the knowledge of mathematics and electrical engineering principles to design lighting systems for different applications.
CO3: Apply the basic knowledge of engineering to analyze the behavior of electrical traction systems under various conditions of operation.

Course Title	Circuit Design using VLSI (Department Elective II)				
Course Code	16EE6DE2CV	Credits	03	L-T-P-S	3-0-0-0
CIE	50 Marks(100% weightage)	SEE	100 Marks(50% weightage)		

Prerequisites:

Fundamentals of HDL

Course Description: This course helps to understand the basic concepts of various MOS technologies. The course also helps to identify the various NMOS and CMOS technologies to be used based on their applications. This course also helps to write, identify the delays in NMOS/CMOS technologies. Scaling of various parameters and use of stick diagram &mask layouts for basic circuits of VLSI can be adopted.

UNIT-I		6 hours

A Review of Microelectronic 3 and an Introduction to MOS and VLSI technologies, MOS transistors fabrication – NMOS and CMOS (N-Well & P-Well), thermal aspects, production of E-beam masks.

UNIT-II		6 hours

Relationship between Drain to Source current Ids versus Vds. MOS transistor characteristics-trans-conductance (gm) and output conductance (gds), figure of merit, NMOS Pass transistor concept. NMOS and COMS inverters. Latch up of CMOS.

UNIT-III		9 hours

Stick diagrams, design, symbolic diagrams of NMOS in NMOS design style and CMOS in CMOS design style. Importance of Lambda based rules. Basic Circuit Concepts: Sheet resistance, capacitance layer, inverter delays (NMOS, CMOS and Cascade), wiring capacitance.

UNIT-IV		8 hours

Scaling of MOS Circuits. Scaling model and scaling factors. Limitations of scaling. Subsystem Design and Layout - Some architecture issues- other systems considerations. Some observations on design process.Two input NMOS & CMOS - NAND and NOR gates

UNIT-V		10 hours

Forms of CMOS logic- Pseudo NMOS logic, Dynamic CMOS logic, CMOS domino logic, n-p CMOS logic. Examples of structural design-A Parity generator, Bus Arbitration logic for n-line

bus, 4x1 multiplexers, Four line Gray code to Binary code converter, two phase clocking. Concept of dynamic register element, Dynamic shift register. An Illustration of design process.	
Text books:	
1.	"Basic VLSI Design" , Pucknell Douglas Al , PHI , 3rd Edition
Reference books:	
1.	Fundamentals of Modern VLSI Devices"-Yuan Taun Tak H Ning Cambridge Press, South Asia Edition 2003..
2.	"Modern VLSI Design Wayne wolf", Pearson Education Inc. 3rd edition"-Wayne Wolf 2003
Course Outcomes: Upon the completion of the course the student must be	
CO1: Able to describe and compare various types of VLSI technology. Also understand the methodology of fabrication process.	
CO2: Apply the knowledge of MOS technology for simple analog/digital circuits.	
CO3: Use of scaling methods based on various circuit parameters and apply scaling.	
CO4: To identify the various NMOS and CMOS technology to be used based on their applications and demonstrates the working of a few VLSI circuits	

Course Title	COMMUNICATION SYSTEMS (Department Elective II)				
Course Code	16EE6DE2CS	Credits	3	L-T-P-S	3-0-0-0
CIE	50 Marks(100% weightage)	SEE	100 Marks(50% weightage)		

Prerequisites:

Signals and Systems, Basic Electronics

Course Description:

This course provides an understanding of communication theory as applied to transmission of information bearing signals with equal emphasis given to both analog and digital communication techniques. This is a foundation course for Computer Communication Networks and Distribution computing courses.

UNIT-I		8 hours

Amplitude modulation: Time-Domain Description, Frequency domain description, Generation of AM waves, Detection of AM waves, Double Sideband – Suppressed Carrier Modulation, Time-Domain Description, Frequency domain description Generation of DSBSC waves, Coherent Detection of DSBSC Modulated waves. Costas Receiver, FDM

UNIT-II		8hours

Angle modulation: Basic Concepts, Frequency Modulation, Narrow Band Frequency Modulation, Wide Band Frequency Modulation, FM waves, Generation of FM waves, Direct FM, demodulation of FM waves.

UNIT-III		8 hours

Noise in Analog modulation systems: Signal-to-noise ratios, AM receiver model, Signal-to - noise ratios for coherent reception, DSBSC receiver, SSB receiver, noise in AM receivers using envelope detection, threshold effect, FM receiver model, noise in FM reception, FM threshold effect, pre-emphasis and de-emphasis in FM systems.

UNIT-IV		8 hours

Pulse modulation: Sampling theorem for low-pass and band-pass signal, PAM, natural sampling, flat-top sampling, signal recovery through holding, quantization of signals, quantization error, Pulse Code Modulation, delta Modulation, Adaptive delta modulation.

UNIT-V		7hours

Digital Modulation: Introduction, Binary Shift Keying, Phase – Shift Keying, Frequency – Shift Keying, Summary of Three Binary Signaling Schemes, line codes,TDM.

Text books:	
2.	"An introduction to Analog and Digital communication", Simon Haykin, Wiley publications, 2nd Edition.
3.	"Principles of communication systems", Taub and Schilling, Tata McGraw Hill Publications, 4th edition.
Reference books:	
3.	"Electronic Communication Systems", Blake, Thomson publishers, 2nd Edition.
4.	"Electronic Communication Systems", George Kennedy, Tata McGraw Hill Publications, 4th edition.
E-learning:	
1.	NPTEL course: Communication Engineering by Prof. Surendra Prasad, Department of Electrical Engineering, Indian Institute of Technology, Delhi
2.	NPTEL course: Advance Digital Communication by Dr. P.R. Sahu, IIT Guwahati

Course outcomes At the end of the course ,the student will have the ability to
CO1: Acquire basic knowledge of communication systems.
CO2 : Characterize and analyze different modulation techniques for analog & digital communication
CO3: Analyze the effect of noise on analog signals

Course Title	ELECTRICAL MACHINE DESIGN (Department Elective II)				
Course Code	16EE6DE2MD	Credits	3	L-T-P-S	3-0-0-0
CIE	50 Marks(100% weightage)	SEE	100 Marks(50% weightage)		

Prerequisites:

Basic electrical engineering, Electrical Machines and Geometry

Course Description:

This course provides a basic knowledge of preliminary design of rotating DC and AC electrical machines by applying fundamental knowledge of physical and mathematical principles which have been already established and considering economic aspects

UNIT-I		5 hours

Principles of Electrical Machine design and Electrical Engineering materials
Introduction, Factors and Limitations in design of electrical machines. Introduction to Computer aided design – Analysis method, synthesis method and Hybrid method. General procedure for design optimization [Examples only for discussion]
Electrical Engineering materials – conductor, magnetic and insulating materials used in electrical machines.

UNIT-II		7 hours

General Concepts and Constraints of Design of rotating electrical machines–

Relation between ratings and dimensions of rotating machines, Symbols, Main dimensions, Total loadings, Specific loadings, Output coefficient, Factors affecting size of machines, Choice of specific loadings, Variation of output and losses with linear dimensions, Separation of D and L – DC machine, Three phase Induction motor, Three phase synchronous machine, Limiting values of D and L, Ventilating ducts

UNIT-III		10 hours

Design of Armature and Commutator DC machine - Selection of number of poles, Guiding factors, Pole proportions, Length of air gap, Pole face profile. Design of Armature – Choice of Armature winding, Number of armature conductors, coils, Number of armature slots – selection and guiding factors, Cross-section of armature conductors, Insulation of armature windings, Slot dimensions, Depth of armature core.

Design of Commutator and Brushes – Commmutator diameter, number of segments, length of commutator, dimensions of brushes, Losses of Commutator surface and permissible temperature rise.		
UNIT-IV		**8 hours**
Design of Three phase Cage rotor Induction Motors Stator Design- stator winding, turns per phase, stator conductors, shape of slot, number of slots, area of slots, length of mean turn, stator teeth, stator core. Cage rotor design: Number of rotor slots- rules for selecting slots, reduction of harmonic torques, Design of Rotor bars and slots – Rotor bar current, area of rotor bars, shape and size of slot, slot insulation. Design of end rings – End ring current, Area of end rings.		
UNIT-V		**9 hours**
Design of rotor of three phase synchronous machines **Design of salient pole rotor**-height of pole, design of damper winding, height of pole shoe, pole profile. Magnetic circuit, open circuit characteristics, determination of full load field MMF, design of field winding. **Design of Non salient pole rotor** – rotor design of turbo alternator (type of winding, procedure for rotor winding design)		
Text books:		
1	A course in electrical Machine design, A.K. SAWHNEY, Dhanpat Rai and Co.	
2	Principles of Electrical machine Design R.K. Agarwal	
Reference books:		
1	Performance and design of AC Machines M.G. Say	
2	Design of Electrical Machines V.N. Mittle, Standard Publishers, 4 th Edition.	

Course outcomes At the end of the course ,the student will have the ability to
CO1: Apply the knowledge of fundamental principles, factors electrical engineering materials and use of modern tools for the design of electrical machines.
CO2: Apply the general concepts and constraints in design of rotating electrical machines in design of electrical machines.
CO3: Design the dimensions of different parts and details of windings of rotating electrical machines
CO4: Analyse the effect of dimensions of the different parts of various electrical machines on the output and losses.

Course Title	**Electrical & Electronics Engineering Materials (Cluster Elective I)**				
Course Code	**16EE6GE1EM**	**Credits**	**3**	**L-T-P-S**	**3-0-0-0**
CIE	**50 Marks(100% weightage)**	**SEE**	**100 Marks(50% weightage)**		

Prerequisites:

Basics of Physics & Chemistry

Course Description:

This course covers basics of kinetics, chemical bonding and structure of materials. the facts of conductors, resistors and dielectric materials, different types and properties of semiconductors,concept of magnetic materials and their properties,measurement of electrical and magnetic properties of materials.

UNIT-1		**7 hours**

Introduction, Equilibrium, kinetics and crystal geometry - Materials science & Engineering: Classification of engineering materials, level of structure, structure-property relationship in materials.Crystal geometry: The space lattice, space lattice and crystal structure, crystal direction and planes.

UNIT-2		**9 hours**

Atomic structure, chemical bonding and structure of solid - Atomic structure: Quantum states, ionization potential, electron affinity and electro-negativity. Chemical bonding: bond energy, bond type and bond length, ionic bonding, covalent bonding, metallic bonding, variation of bonding character and properties.Structure of solids: crystalline and non-crystalline states, covalent solids, metal and alloys, ionic solids, the structure of silica and the silicates.

UNIT-3		**7 hours**

Conductors, Resistors and Dielectric materials - Conductors and resistors: The resistivity range, the free electron theory, conduction by free electrons, conductor

and resistor materials, super conducting materials. Dielectric materials: Polarization and dielectric constant, temperature and frequency effects, electric breakdown, ferroelectric materials, piezoelectricity, dielectric losses		
UNIT-4		**8 hours**
Semiconductors - Classifying materials as semiconductor, the chemical bond in Si and Ge, the density of carriers in intrinsic semiconductor; the energy gap, the conductivity of intrinsic semiconductors, extrinsic semiconductors, carrier density in n-type semiconductors, p-type semiconductors, Hall effect and carrier density, photoconductivity, fabrication of integrated circuits		
UNIT-5		**8 hours**
Magnetic Materials, Measurement of Electrical and Magnetic properties - Classification of magnetic materials, diamagnetism, the origin of permanent magnetic dipoles in matter, soft magnetic materials, hard magnetic materials, some properties of ferromagnetic materials, antiferromagnetic materials, Measurement of Electrical and Magnetic properties: Conductivity measurements, dielectric measurements, magnetic measurements, measurements of semiconductor parameters		
Text book		
1	Materials Science and Engineering, V. Raghavan,PHI Learning Private Limited, Fifth Edition. 42nd reprint2013.	
2	Electrical Engineering Materials, A.J. Dekker, Prentice Hall of India Private Limited, 13thre-print1988.	
Reference books:		
1	An Introduction to Electrical Engineering Materials,C.S.Indulkar and S. Thiruvengadam, S. Chand & Company Ltd. 3rd Edition, reprint 1985.	
2	Electronic Engineering Materials and Devices, John Allison,Tata McGraw-Hill Publishing Company Ltd. 9th reprint 1990.	

Course outcomes At the end of the course ,the student will have the ability to
CO1: Understand the physics of equilibrium and kinetics and crystal geometry of engineering materials.
CO2: Understand the concept of atomic structure, chemical bonding, and structure of solid.
CO3: Apply the principle of physics and mathematics to understand about the properties of conductors, semiconductors, dielectric and magnetic materials.
CO4: Apply the concept of conductor, semiconductor, dielectric and magnetic materials to measure properties of these materials

Course Title	ELECTROMAGNETIC COMPATIBILITY (Cluster Elective I – Except EC & IT)				
Course Code	16EE6GE1EC	Credits	3	L-T-P-S	3-0-0-0
CIE	50 Marks(100% weightage)	SEE	100 Marks(50% weightage)		

Prerequisites:

Analog Electronic, Digital electronics, Power electronics.

Course Description:

The course covers topics on introduction to EMI/EMC, Cabling, balancing and filtering, grounding, and shielding, Electro static discharge.

UNIT-I		8 **hours**

Introduction - Designing of electromagnetic compatibility, EMC regulation, typical noise path, and Use of network theory, method of noise coupling, miscellaneous noise sources, and method of eliminating Interference.

UNIT-II		**8 hours**

Cabling - Capacitive coupling, effect of shield on magnetic coupling, mutual inductance calculations, magnetic coupling between shield and inner conductor, shielding to prevent magnetic radiation, shielding a receptor against magnetic fields, shield transfer impedance, experimental data, example of selective Shielding, co-axial cable versus shielded twisted pair braided shields.

UNIT-III		**7 hours**

Balancing and filtering - Balancing, power supply decoupling, decoupling filters, amplifier Decoupling driving capacitive loads, high frequency filtering, system bandwidth, and modulation and Coding. Introduction to Grounding - Safety grounds, signal grounds, single point ground systems, hybrid grounds, multipoint ground systems, functional ground layout, practical low frequency grounding, hardware grounds

UNIT-IV		**8hours**

Shielding - Near field and far fields, characteristic and wave impedance's shielding effectiveness, absorption loss, reflection loss, composite absorption and reflection loss, summary of shielding equation, Shielding with magnetic material, experimental data, apertures, wave guide below cut off, conductive gaskets, conductive windows, conductive coatings, cavity resonance, brooding of shields.

UNIT-V		8 hours
Electrostatic discharge - State generation, human body model, static discharge, and ESD Protection in equipment design, software and ESD protection, ESD versus EMC.		
Text books:		
1	Noise reduction techniques in electronic systems, Henry W. Ott, John Wiley, 2nd edition, 1988	
2	Engineering Electromagnetic Compatibility: Principles, Measurements & Technologies, V. Prasad Kodali, S. Chand & Co. Ltd. Delhi, 2000	
Reference books:		
1	Electromagnetics Explained – A Hand Book For Wireless/Rf,Emc And High Speed Electronics	

Course Outcomes:
After the completion of the course, the student will be able to
CO1: Analyze the fundamentals and reason for noise in Analog electronics, Power Electronics and Digital electronics circuit**.**
CO2 : Design and development of filters for Analog electronics, Power electronics and Digital circuits for reduction of noise.
CO3 : Design the various types of grounding systems and get familiarized with handling electro static discharge systems
CO4 :Acquire knowledge about testing standards and regulations.

Course Title	**Modern Control Theory (Cluster Elective I –Except EE)**

Course Code	**16EE6GE1CT**	**Credits**	**03**	**L-T-P-S**	**2-1-0-0**
CIE	**50 Marks(100% weightage)**	**SEE**	**100 Marks(50% weightage)**		

Prerequisites:

Control Systems

Course Description:

This course intends to create state models using physical variables, phase variables and canonical variables that are used to solve state equations. It also deals with the various techniques used to analyse the controllability and observability of a system. Basics about nonlinear systems are also dealt with.

UNIT-I		**8 hours**

State variable analysis and design:
Introduction, concept of state, state variables and state model, state modeling of linear systems, linearization of state equations. State space representation using physical variables & canonical variables

UNIT-II		**8 hours**

Derivation of transfer function from state model, Eigen values, Eigen vectors, generalized Eigen vectors. Solution of state equation ,state transition matrix and its properties, computation using Laplace transformation, power series method, Cayley -Hamilton method

UNIT-III		**7 hours**

Concept of controllability & observability, methods of determining the same, Effect of Pole-Zero cancellation. Duality.

UNIT-IV		**8 hours**

Pole placement techniques - Stability improvements by state feedback, necessary & sufficient conditions for arbitrary pole placement, state regulator design, and design of state observer.

UNIT-V		**8 hours**

Non-Linear systems - Introduction, behavior of non-linear system, common physical non linearity –saturation, friction, backlash, dead zone, relay, multivariable non-linearity. Phase plane method, singular points, stability of nonlinear system, limit cycles, construction of phase trajectories.	
Text books:	
1	Digital control & state variable methods- M.Gopal,THM Hill, 2nd edition, 2003
2	Control system Engineering- I.J .Nagarath & M.Gopal, New Age International (P)Ltd, 3rd edition.
Reference books:	
1	State space Analysis of Control Systems- Katsuhiko Ogata- Prentice Hall Inc
2	Automatic Control Systems- Benjamin C. Kuo & Farid Golnaraghi , John Wiley & Sons, 8th edition, 2003
3	Modern Control Engineering- Katsuhiko Ogata-PHI 2003
4	Modern control systems-Dorf& Bishop- pearson education,1998

Course outcomes At the end of the course ,the student will have the ability to
CO1: Create state models using physical variables ,mathematical variables and to solve the state equation
CO2: Identify appropriate techniques to analyze the system for its controllability and observability
CO3: Apply relevant concepts to design systems with state feedback to meet the specifications, Comprehend mathematical representation of nonlinear systems and analysis of a few simple models.

Assessment Pattern

Continuous Internal Evaluation (CIE) includes test, quiz, assignment, seminar, term paper,

open ended experiments, mini-projects, two minute videos, MOOCs etc.

Alternative Assessment:
Alternative Assessment Tool (AAT)includes seminar, assignments, term paper, open ended experiments, mini-projects, two minute videos, MOOCs etc.

Semester End Examination(SEE)– A written examination for theory courses and practical/design examination with built-in oral part (Viva-Voce).

Both CIE and SEE have equal (50:50) weightage. The Student's performance in a course shall be judged individually and together based on the results of CIE and SEE.

ASSESSMENT PATTERNS WITH 20% WEIGHTAGE FOR AAT
Assessment pattern for Regular/Normal courses:

COMPONENT	THEORY		TOTAL MARKS
Type of Assessment	Test	Quiz or AAT	
Max.CIEMarks	40	10	50

Assessment pattern for Integrated Courses:

COMPONENT	THEORY		PRACTICAL			Total Marks
Type of Assessment	Test	Quiz or AAT	Records & Performance	LabTest	Viva-voce/ AAT	
Max.CIEMarks	20	05	10	10	05	50

Assessment pattern for Comprehensive Courses
(Applicable for the batches admitted from 2014-15 onwards):

Component	Theory (50%)		Practical (30%)		Self-Study (20%)	Total Marks
Type of Assessment	Test	Quiz	Lab Performance/ Record	LabTest	AAT	
Max.CIE Marks	20	05	10	05	10	50

ASSESSMENT PATTERNS WITH 40% WEIGHTAGE FOR AAT

A faculty, who wishes to design AAT with more than 20% weightage, shall create a new pattern

for assessment indicating weightages for all the three components.

Note: Studentsmustsecureaminimumof40% in CIE andshouldhave85% attendance.

In case of integrated and comprehensive courses, a student must secure a minimum of 40% marks and 85% attendance in both theory and practical components. In addition, the overall CIE marks including theory, practical and self-study components shall not be less than 40%.

Note - For a detailed Assessment pattern refer Rules and Regulation book (2015-16)

BMS COLLEGE OF ENGINEERING, BANGALORE-19

(Autonomous College under VTU)

DEPARTMENT OF ELECTRICAL AND ELECTRONICS ENGINEERING

SCHEME & SYLLABUS FOR III & IV SEMESTER

Academic Year. 2015-16

BMS COLLEGE OF ENGINEERING

Bull Temple Road, Bangalore - 560 019

B.M.S COLLEGE OF ENGINEERING, BENGALURU-19

(Autonomous College under VTU)

DEPARTMENT OF ELECTRICAL & ELECTRONICS ENGINEERING

VISION	MISSION
Promoting Prosperity of mankind by augmenting human resource capital through Quality Technical Education& Training	Accomplish excellence in the field of Technical Education through Education, Research and Service needs of society

DEPARTMENT OF ELECTRICAL & ELECTRONICS ENGINEERING

SECOND YEAR SYLLABUS BOOK

With effect from A. Y. 2015 – 16

B.M.S COLLEGE OF ENGINEERING, BENGALURU-19

(Autonomous College under VTU)

DEPARTMENT OF ELECTRICAL & ELECTRONICS ENGINEERING

DEPARTMENT VISION	DEPARTMENT MISSION
Facilitating the development of competent professionals capable of adapting to the constantly changing global scenario in the field of Electrical Sciences	- Impart quality technical education and encourage research in the field of Electrical Sciences - Empower every individual to develop as a professional with an ability to apply his/her knowledge and skills to adapt to the evolving technological requirements of society

PROGRAMEDUCATIONAL OBJECTIVES (PEOs)

The PEOs have been evolved in alignment with the vision and mission of the Department. The broad objective of the program isto facilitate the development of competent and successful professionals in tune with modern day technological and societalrequirements. Therefore, after concerted interactions (both formal and informal) with all major constituents including Alumni, Employers, expertsfrom industry and institutions, faculty and students, parents etc., the followingProgram Educational Objectives of the UG course offered by Electrical and Electronics Engineering department have beenarrived at:

The PEOs of the program is as under:

1. PEO-1:Possess successful careers in Electrical Sciences, and allied areas and pursue higher education with a broad knowledge base in Mathematics and Engineering principles.

2. PEO-2:Utilize their technical, analytical, communicative and managerial skills and knowledge for societal progress and enrich them to keep in pace with relevant advancements by engaging themselves in lifelong learning.

3. PEO-3: Exhibit professionalism by displaying competence, leadership, dedication and commitment.

B.M.S COLLEGE OF ENGINEERING, BENGALURU-19

(Autonomous College under VTU)

DEPARTMENT OF ELECTRICAL & ELECTRONICS ENGINEERING

Program Outcomes

Program outcomes (POs), are attributes acquired by the students at the time of graduation. The POs given in the table below, ensure that the POs are aligned to the Graduate Attributes (GAs) specified by National Board of Accreditation (NBA). These attributes are measured at the time of graduation and hence computed every year for outgoing batch. The POs are addressed and attained through the Course Outcomes (COs) of various courses of the curriculum.

PO-1	Apply the knowledge of mathematics, science, and engineering principles to the solution of electrical and allied engineeringproblems.
PO-2	Formulate and analyze complex engineering problems using first principles of mathematics, physical and engineering sciences.
PO-3	Design solutions for complex engineering problems, and design system components that meet specific societal needs.
PO-4	Design and conduct experiments and analyze and interpret data for complex systems.
PO-5	Select and apply appropriate modern engineering tools to complex engineering activities with an understanding of the limitations.
PO-6	Apply reasoning informed by contextual knowledge to assess societal health, safety, legal and consequent responsibilities relevant tothe professional engineering practice.
PO-7	Understand the impact of the professional engineering solutions in societal and environmental contexts, and demonstrate theknowledge of, and need for sustainable development.
PO-8	Understand ethical principles and social issues.
PO-9	Function effectively as an individual, and as a member or leader in diverse teams to accomplish a common goal.
PO-10	Communicate effectively with diverse audiences and able to write effective reports and design documentation.
PO-11	Demonstrate knowledge and understanding of the engineering and management principles and apply these to one's own work, as amember and leader in a team, to manage projects in multi-disciplinary environments.
PO-12	Recognize the need to engage in independent and lifelong learning in the context of technological change.

B.M.S COLLEGE OF ENGINEERING, BENGALURU-19

(Autonomous College under VTU)

DEPARTMENT OF ELECTRICAL & ELECTRONICS ENGINEERING

III Semester Scheme

Sl. No.	Course Code	Course Title	Credits				
			L	T	P	S	Total
1	15MA3GCAEM	Advanced Engineering Mathematics	3	1	0	0	4
2	15ES3GCLCA	Linear Circuit Analysis	3	1	0	0	4
3	15ES3GCAME	Analog Microelectronics	3	0	1	2	6
4	15ES3GCDEC	Digital Electronics	3	0	1	2	6
5	15EE3DCFTH	Field Theory	3	1	0	0	4
6	15EE3DCSL1	Simulation Lab –I	0	0	1	0	1
TOTAL			15	3	3	4	25

IV Semester Scheme

Sl. No.	Course Code	Course Title	Credits				
			L	T	P	S	Total
1	15MA4GCDMP	Discrete Mathematics and Probability	3	1	0	0	4
2	15ES4GCAIC	Analog Integrated Circuits	3	0	1	2	6
3	15ES4GCMCS	Microcontrollers	3	0	1	2	6
4	15ES4GCCST	Control Systems	3	1	0	0	4
5	15ES4GCSAS	Signals and Systems	3	1	0	0	4
6	15EE4DCSL2	Simulation Lab -II	0	0	1	0	1
TOTAL			15	3	3	4	25

B.M.S COLLEGE OF ENGINEERING, BENGALURU-19

(Autonomous College under VTU)

DEPARTMENT OF ELECTRICAL & ELECTRONICS ENGINEERING

NOMENCLATURE FOR THE COURSE CODE

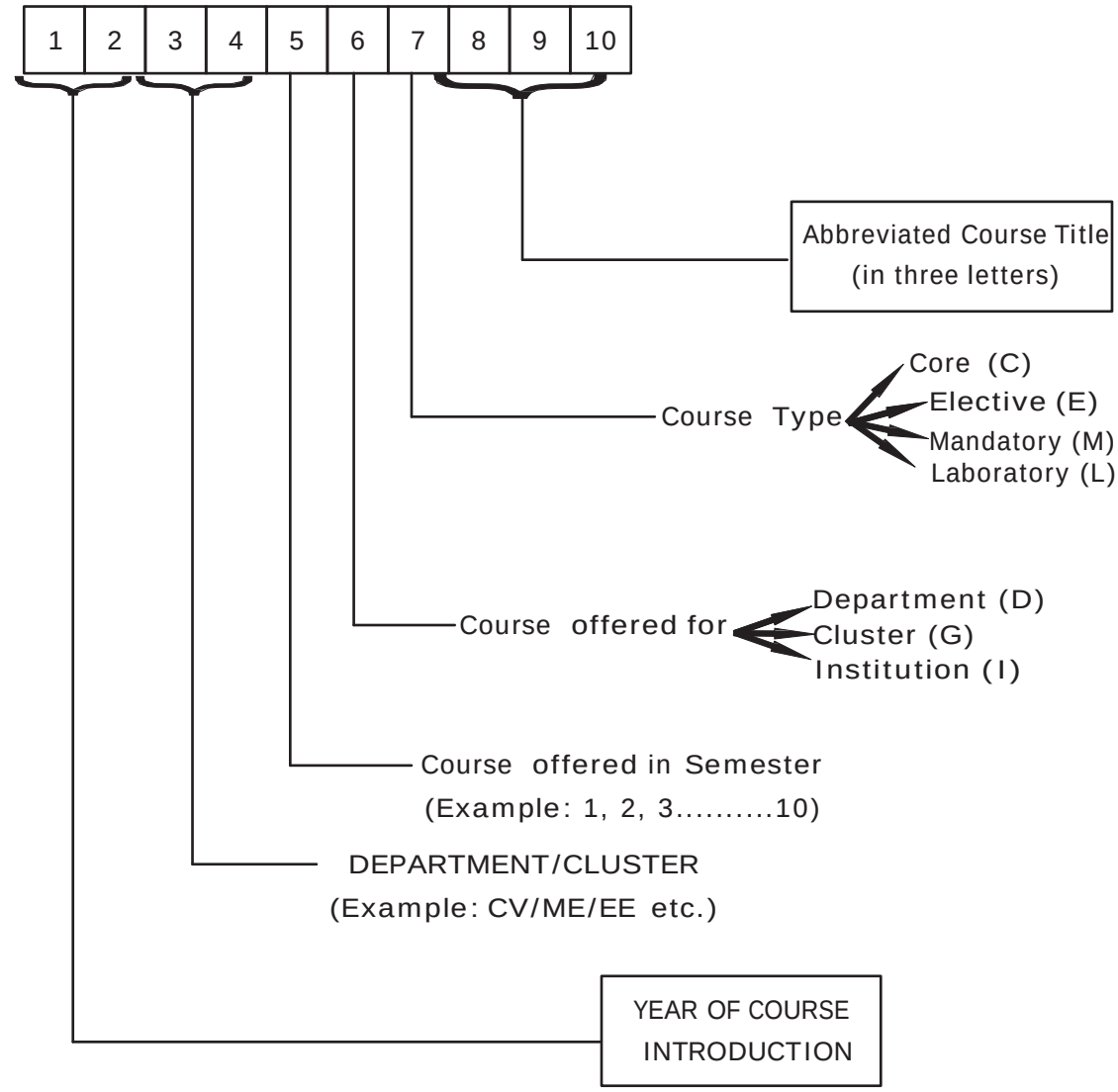

B.M.S COLLEGE OF ENGINEERING, BENGALURU-19

(Autonomous College under VTU)

DEPARTMENT OF ELECTRICAL & ELECTRONICS ENGINEERING

Course Title	ADVANCED ENGINEERING MATHEMATICS (Common to EC, TE, EE, IT, ML)				
Course Code	15MA3GCAEM	Credits	4	L-T-P-S	3:1:0:0
CIE	50 Marks(100% weightage)	SEE	100 Marks(50% weightage)		

Prerequisites:

Trigonometricformulas, methods of differentiation, methods of integration, partial derivatives, matrices, Fourier Series, Fourier Transforms

UNIT-I 9 hours

MATRICES:Introduction: Elementary row transformations, Echelon form of a matrix, rank of a matrix by elementary row transformations. Consistency of system of linear equations and solution.

Solution of a system of non-homogenous linear algebraic equations: Gauss elimination method, LU decomposition method, Gauss-Seidel method. Eigenvalues and eigenvectors of matrices.Reduction of a matrix to diagonal form. (7L+2T)

Suggested Reading: Inverse of a matrix using Gauss-Jordan method. Largest Eigenvalue and corresponding eigenvector using Rayleigh power method.

UNIT-II 10hours

NUMERICAL METHODS:

Solution of algebraic and transcendental equations: Newton-Raphson method.

Finite Differences and interpolation: Forward differences, backward differences. Newton-Gregory forward interpolation formula, Newton-Gregory backward interpolation formula, Lagrange's interpolation formula, Lagrange's inverse interpolation. Numerical integration: Simpson's $1/3^{rd}$, $3/8^{th}$ rule, Weddle's rule. Numerical solution of ordinary differential equations: Euler's modified method, Runge-Kutta method of fourth order. (8L+2T)

Suggested Reading: Milne's method to solve ordinary differential equations. Solution of simultaneous differential equations by Runge-Kutta fourth order method.

UNIT-III 10hours

PARTIAL DIFFERENTIAL EQUATIONS:

Formation of Partial differential equations-elimination of arbitrary constants, elimination of arbitrary functions. Equations of first order- Solution of the linear equation P p + Q q = R (Lagrange's partial differential equation).

Applications: One-dimensional heat equation and wave equation (without proof), Transmission line-telegraph equations, various possible solutions of these by the method of separation of variables.

(7L+3T)

Suggested Reading: Direct integration method, method of separation of variables, D'Alembert's solution of wave equation.

UNIT-IV 9hours

COMPLEX ANALYSIS 1:

Function of a complex variable, limits, continuity and differentiability of a complex valued function. Analytic functions, properties of analytic functions, Cauchy-Riemann equations in Cartesian and polar form, construction of analytic functions by Milne-Thomson method.

Conformal mapping-Transformations: $w = z^2$ and $w = z + \frac{a^2}{z}$, $z \neq 0$

Bilineartransformations.

(7L+2T)

Suggested Reading: Standard transformations

UNIT-IV 9hours

Complex integration: Line integral, Problems on line integral, Cauchy's theorem, Cauchy's integral formula.

Complex series: Taylor's series, Maclaurin's series and Laurent's series (without proof).

Zeros, Poles and Residues: Residue theorem (without proof). Evaluation of real definite integrals using residues (7L+3T)

Suggested Reading: Power series, radius of convergence. Removable and essential singularities, improper real integrals with singular points on real axis.

Applications: Use of harmonic function to a heat transfer problem. Analyzing AC circuits, Current in a field- effect transistor.

Mathematics Lab

Solution of system of algebraic equations using Gauss Seidel method.

LU decomposition of matrices.

Eigenvalues and eigenvectors of matrices.

Largest Eigenvalue, smallest Eigenvalue and corresponding eigenvectors of a matrix.

Solution of algebraic and transcendental equations using Newton- Raphson method.

Numerical integration.

Numerical solution of ordinary differential equations

Text books:

1. Higher Engineering Mathematics, B.S. Grewal, 43rd edition, 2014, KhannaPublishers.
2. AdvancedEngineering Mathematics, 5th edition, 2011, by Dennis G.Zill and Cullen, Jonesand Bartlett India Pvt. Ltd.

Reference books:

1. Higher Engineering Mathematics, B.V. Ramana, 2007, Tata Mc. Graw Hill.
2. Advanced Engineering Mathematics, Erwin Kreyszig, 10th edition Vol.1 and Vol.2, 2014, Wiley-India.
3. Numerical Methods for Scientific and Engineering Computation. M.K. Jain, S.R.K Iyengar, R.K. Jain, 6th edition, 2010, New Age International (P) Limited Publishers

E Books:

1. Engineering Mathematics, K. A. Stroud, Dexter J. Booth, Industrial Press, 2001http://books.google.co.in/books/about/Engineering_Mathematics.html?id=FZncL-xB8dEC&redir_esc=y.
2. Advanced Engineering Mathematics, P. V. O'Neil, 5th Indian reprint, 2009, Cengagelearning India Pvt. Ltd.
3. http://ocw.mit.edu/courses/mathematics/ (online course material)

Moocs:

1. http://nptel .ac.in/courses.php?disciplineId=111
2. https://www.khanacademy.org/
3. https://www.class-central.com/subject/math (MOOCS) (4)E-learning: www.vtu.ac.in
4. E-learning: www.vtu.ac.in

Course outcomes

At the end of the course ,the student will have the ability to

CO-1:	Obtain numerical solution a system of algebraic equations, algebraic and transcendental equations and ordinary differential equations.
CO-2:	Formulate boundary value problems involving one dimensional heat and wave equation
CO-3:	Solve partial differential equations with appropriate boundary conditions using the method of separation of variables
CO-4:	Construct analytic functions and simple conformal mappings.
CO-5:	Evaluate real and complex integrals using the calculus of residues.

B.M.S COLLEGE OF ENGINEERING, BENGALURU-19

(Autonomous College under VTU)

DEPARTMENT OF ELECTRICAL & ELECTRONICS ENGINEERING

Course Title	LINEAR CIRCUITANALYSIS				
Course Code	15ES3GCLCA	Credits	4	L-T-P-S	3:1:0:0
CIE	50 Marks(100% weightage)	SEE	100 Marks(50% weightage)		

Prerequisites:

Basic Electrical Engineering, Engineering Mathematics- I & II

UNIT-I 5+2 hours

Basic Concepts:

Practical sources, Source transformations, Network reduction using Star Delta transformation, Loop and node analysis with linearly dependent and independent sources for DC and AC networks, Concepts of supernode and supermesh.

UNIT-II 8+3hours

Network Topology:

Graph of a network, Concept of tree and co-tree, incidence matrix, tie-set, tie-set & cut-set schedules, Formulation of equilibrium equations, Principle of duality.

Resonant Circuits: Series and parallel resonance, frequency response of series and Parallel circuits, Q factor, Bandwidth

UNIT-III 7+3hours

Network Theorems:

Superposition, Reciprocity, Milliman's, Thevenin's and Norton'stheorems; Maximum Power transfer theorem

UNIT-IV 10+3hours

Transient behavior and initial conditions:

Behavior of circuit elements under switching condition and their representation, evaluation of initial and final conditions in RL, RC and RLC circuits
Laplace Transformation & Applications:
Review of Laplace transforms, Waveform Synthesis, initial and final value theorems, step, ramp and impulse responses, convolution theorem, solution of simple R-L,R-C,R-L-C networks for AC and DC excitations using Laplace transforms.

UNIT-III 6+1hours

Two port network parameters and State Variable analysis:

Definition of z,y,h and transmission parameters, modeling with these parameters, relationship between parameters sets. Writing state equations and solution using Laplace transforms.

Text books:

1. "Network Analysis",M.E.VanValkenburg,PHI/PearsonEducation,3rdEdition. Reprint2002.
2. "Network and systems", Roy Choudhury, 2nd edition, 2006 reprint, New Age International Publications
3. Theory and Problems of Electric Circuits, Schaum`s Series,2ndEditionMcGrawHill

Reference books:

1. "Engineering Circuit Analysis",Hayt, Kemmerly and Durbin,TMH6th2002
2. "Network analysis and Synthesis",Franklin F. Kuo,Wiley Edition
3. "Analysis of Linear Systems",David K. Cheng,Narosa Publishing House,11th reprint,2002
4. "Circuits",Bruce Carlson,Thomson Learning,2000.Reprint2002

E Books:

1. Nptel.ac.in/courses/108105065- Networks signals and systems by Prof T.K. Basu, IIT Kharagpur
2. Nptel.ac.in/courses/108102042- Circuit Theory by Prof Dutta Roy S.C, IIT Delhi
3. www.electrodiction.com/circuit-theory

Moocs:

1. http://elearning.vtu.ac.in/06ES34.html
2. https://www.coursera.org/course/circuits

Course outcomes

At the end of the course ,the student will have the ability to

CO-1:	Formulate equations based on physical laws and analyze the steady state behavior of complex electric networks
CO-2:	Apply the knowledge of mathematics and graph theory to the solution of complex electrical networks
CO-3:	Apply mathematical and analytical techniques to analyze transient behavior of networks
CO-4:	Analyze networks based on two port networks and state variables

B.M.S COLLEGE OF ENGINEERING, BENGALURU-19

(Autonomous College under VTU)

DEPARTMENT OF ELECTRICAL & ELECTRONICS ENGINEERING

Course Title	ANALOG MICROELECTRONICS				
Course Code	15ES3GCAME	Credits	6	L-T-P-S	3-0-1-2
CIE	50 Marks(100% weightage)	SEE	100 Marks(50% weightage)		

Prerequisites:

Elements of Electronics Engineering

UNIT-I 7 hours

Diodes: Introduction

Limiting and clamping circuits -Limiter circuits, The Clamped capacitor or DC restorer.

Bipolar Junction Transistor (BJTs): Introduction,

Single stage BJT amplifiers -The basic structure , characterizing BJT Amplifiers, The common emitter amplifier

Frequency Response of the CE amplifier-The 3 frequency bands, The high frequency response The low frequency response.

UNIT-II 8 hours

MOSFETS:

Introduction ,Device structure and physical operation -Device structure, operation with no gate voltage, creating a channel for current flow, Applying a small VDs, Operation as VDs is increased, Derivation of the id-V_{DS} relationship, The P- Channel MOSFET, Complementary MOS or CMOS, operating the MOS transistor in the subthreshold region .

Current voltage Characteristics – Circuit symbol, id-V_{DS} characteristics, characteristics of the P-Channel MOSFET

MOSFET Circuits at DC

The MOSFET as an amplifier and as a switch - Large - signal operation , Graphical derivation of the transfer characteristic, operation as a switch, operation as a linear amplifier.

Biasing in MOS amplifier circuits-Biasing by fixing V_{GS}, Biasing by fixing V_G and connecting a resistor in the source , Biasing using a drain to gate feedback resistor, biasing using a current source.

UNIT-III 7 hours

Small - signal operation and models of MOSFETs-The DC bias point, the signal current in the drain terminal ,the voltage gain, separating dc analysis and the signal analysis, small signal equivalent circuit models, the transconductanceg_m, the T equivalent circuit model.

Single stage MOS amplifiers - The basic structure, characterizing amplifiers, The CS amplifier, The CS amplifier with a source resistance.

IC Biasing - Current sources, current mirror and current steering circuits-

The basic MOSFET current source, MOS current steering circuits

Current mirror circuit with improved performance - The Wilson current mirror

UNIT-IV 7 hours

Feedback:-

Introduction ,the general feedback structure, Some properties of negative feedback-Gain density, bandwidth extension, noise reduction, reduction in nonlinear distortion, The four basic feedbacktopologies- Voltage amplifiers, current amplifiers, transconductance amplifiers , practical feedback circuits for current series and voltage series feedback

UNIT- V 7 hours

Power Amplifiers:

Introduction, The classification of output stages.

Class A output stage - transfer characteristic, signal waveforms, power dissipation, power conversion efficiency, transformer coupled power amplifiers, class B transformer coupled amplifier

Class B output stage - Circuit operation , transfer characteristic, power conversion efficiency, power dissipation, reducing crossover distortion, single supply operation

Class AB output stage - Circuit operation, output resistance

Power BJTs – Junction temperature, thermal resistance, power dissipation versus temperature, transistor case and heat sink

Laboratory Experiment List:

Diode and Transistor as a switch, Zener diode characteristics and Zener as regulator, Diode clipping circuits- Single/Double ended, Diode clamping Circuits - positive clamping/negative clamping, BJT as RC coupled amplifier, BJT as RC phase shift oscillator, Crystal Oscillator, Power Amplifier, Open ended experiments.

This course shall include an assessment based on the QEEE Phase IV on 'Fundamentals of Small Signal Analysis' taught by Prof.ShanthiPavan, IIT Madras.

Text books:

1. Microelectronic Circuits-Theory and applications by Adel S. Sedra and Kenneth C.Smith, Fifth Edition , (Oxford International Student Edition)
2. Electronic Devices and Circuit Theory-Robert L.Boylestad and Louis Nashelsky (Pearson Education)

Reference books:

1. Electronic Devices and Circuits- Millman and Halkias, TMH

E Books:

1. www.pyroelectro.com/edu/analog
2. http://freevideolectures.com/Course/3020/Circuits-for-Analog-System-Design

Moocs:

1. https://www.mooc-list.com/course/electronic-systems-and-digital-electronics-uninettuno?static=true
2. http://ocw.mit.edu/courses/electrical-engineering-and-computer-science/6-012-microelectronic-devices-and-circuits-spring-2009/
3. Introductory Analog Electronics Laboratory (Spring 2007) by MIT Open Courseware | Reviews and Ratings

Course outcomes

At the end of the course ,the student will have the ability to

CO-1: Define, understand and explain the structure, V-I characteristics, working and applications of analog electronic devices like diodes, Bipolar Junction Transistors(BJTs) and MOSFETs
CO-2: Apply the knowledge of KVL and KCL to obtain voltage /current/waveform at different points in analog electronic circuits such as diode clippers, clampers, amplifiers using BJTs and MOSFETs, current sources, current mirrors, power amplifiers, feedback amplifiers

CO-3:	Analyze analog electronic circuits such as diode clippers, clampers, amplifiers using BJTs and MOSFETs, current sources, current mirrors, power amplifiers, feedback amplifiers etc. to obtain voltage /current/waveform at different points for given specifications
CO-4:	Design analog electronic circuits such as diode clippers, clampers, amplifiers using BJTs and MOSFETs, current sources, current mirrors, power amplifiers, feedback amplifiers for given specifications.
CO-5:	Conduct experiments using analog electronic components and electronic instruments to function as switch, regulator, clippers, clampers, small signal amplifiers, oscillators, power amplifiers
CO-6:	Engage in self-study/independent study to formulate, design, implement, analyze and demonstrate an application using analog electronic components through an open ended experiment
CO-7:	Engage in self-study/independent study to submit a seminar report and make an effective presentation on topics related to the course (e-waste management, www.deity.gov.in, Comparative study of components, preparing the specifications of components, verifying the data sheets, applications of analog electronics)

B.M.S COLLEGE OF ENGINEERING, BENGALURU-19

(Autonomous College under VTU)

DEPARTMENT OF ELECTRICAL & ELECTRONICS ENGINEERING

Course Title	DIGITAL ELECTRONICS				
Course Code	15ES3GCDEC	Credits	6	L-T-P-S	3:0:1:2
CIE	50 Marks(100% weightage)	SEE	100 Marks(50% weightage)		

Prerequisites:

Elements of Electronics Engineering

UNIT-1 8 hours

Introduction: Review of Boolean algebra, logic gates.

Simplification of Boolean functions :Three Variable K – Maps, Four Variable K – Maps, The Tabulation Method, Determination of Prime Implicants, Selection of prime implicants.

Combinational Logic Circuits: Introduction, Carry Look Ahead Adder, Parallel Adder, Decimal Adder Code conversion, , Magnitude Comparator, Decoders, Multiplexers, Read Only memories (ROM), Programmable Logic Arrays(PLAs).

UNIT-2 7 hours

Flip-Flops:

The Basic Flip-flop circuit, Clocked Flip-flops, Triggering of Flip-flops: Master Slave Flip-Flops, Edge Triggered Flip Flops, Characteristic Equations.

UNIT-3 8 hours

Sequential Logic Circuits:

Shift Registers, Ripple Counters, Design of Synchronous Counters

UNIT-4 8 hours

Sequential systems:

Analysis of Clocked Sequential circuits, State Reduction and Assignment, Design Procedure, Design with State Equations

UNIT-5 8 hours

Logic Families: Characteristic of Digital ICs, Transistor – Transistor Logic, Complementary MOS (CMOS) Logic, Comparison of TTL and CMOS families

Laboratory Experiment List:

Applications of IC 7483 (Adders, Subtractors and Comparators), Multiplexers (using Gates and IC) and their applications, Decoders/DeMultiplexers (using Gates and IC) and their applications, BCD to Decimal decoder using 7-segment display, Verification of MSJK Flip-flop (using Gates and IC 7476), Asynchronous counters (using ICs 7476,7490,7493), Synchronous Counters (using ICs 7476, 74190/74192), Shift registers and their applications (using ICs 7476, 7495)

This course shall include assessments based on the QEEE Phase IV lecture on 'Nitty Gritty of Logic Gates to Processor Design' by Prof. Ashok Jhunjhunwala, IIT Madras (based on the topics Logic Gates to Execution Unit Design, ALU design)

Text books:

1. Digital Logic and Computer Design- M. Morris Mano, Prentice Hall – Pearson Education
2. Fundamental of Logic Design- Charles Roth Jr., Thomas Learning

Reference books:

1. Digital Principles and Design- Donald Givone, Tata McGraw Hill
2. Digital Logic Applications and principles- John Yarbrough, Pearson Education

E Books:

1. http://www.free-engineering-books.com/2014/11/digital-fundamentals-by-thomas-l-floyd.html
2. https://books.google.co.in/books/about/Fundamentals_of_Digital_

   Circuits.html?id=BOVkrtiLUcEC

Moocs:

1. http://freevideolectures.com/blog/2010/11/130-nptel-iit-online-courses/
2. http://freevideolectures.com/Course/2319/Digital-Systems-Design#
3. www. Pyroelectrom.com/edu
4. Nptel.ac.in/courses/117106086
5. http://nptel.ac.in/courses/117105080
6. Digital Circuits and SystemsYouTube - S. Srinivasan, IIT Madras
7. Digital Integrated Circuits YouTube –Amitava Dasgupta, IIT Madras

Course outcomes

At the end of the course ,the student will have the ability to

CO-1:	Understand, define and explain the fundamental concepts of Digital circuits
CO-2:	Applythe knowledge of digital circuit concepts (Boolean Algebra, K-Maps and Quine-McClusky method) to optimize a digital circuit for the given parameter (number of gates, time delay, power consumption, cost)

CO-3:	Analyze digital circuits and arrive at suitable conclusions
CO-4:	Design a digital circuit for given specifications
CO-5:	Conduct experiments using digital ICs for a given application/problem statement
CO-6:	Engage in self-study to formulate, design, implement, analyze and demonstrate an application of digital electronic circuits through an open ended experiment
CO-7:	Engage in self-study to deliver a seminar on topics related to the course accompanied by a seminar report (www.deity.gov.in, Comparative study of components, preparing the specifications of components, verifying the data sheets, applications of digital ICs, the characteristics/specifications of different digital ICs, etc.)

B.M.S COLLEGE OF ENGINEERING, BENGALURU-19

(Autonomous College under VTU)

DEPARTMENT OF ELECTRICAL & ELECTRONICS ENGINEERING

Course Title	FIELD THEORY				
Course Code	15EE3DCFTH	Credits	4	L-T-P-S	3:1:0:0
CIE	50 Marks(100% weightage)	SEE	100 Marks(50% weightage)		

Prerequisites:

Engineering Mathematics- I & II, Engineering Physics

UNIT-1 10 hours

Introduction to electrostatics: Introduction to line integral, surface integral, volume integral of vectors, Coulomb's Law (vector form), Electric Field Intensity (vector form),EFI due to different types of charge distributions.

Electric Flux Density (EFD), Gauss' Law, Divergence: Electric Flux Density (EFD), Gauss' Law, Application, Divergence and Divergence Theorem

UNIT-2 10 hours

Energy and Potential: Energy spent in moving charge, Definition of Potential Difference (PD), PD due to Point Charge and System of Charge, Energy Density

Current and current density: Current and Current Density, Continuity of Current, Conductor, Properties, and Boundary Conditions

UNIT-3 8 hours

Dielectric: Dielectric materials, boundary conditions,

Poisson's and Laplace's equations: Derivations of Poisson's and Laplace's Equations, solution of Poisson's and Laplace for Single Variables, Capacitance of different configurations using Laplace's equation.

UNIT-4 10 hours

Steady Magnetic Field:

Biot-Savart Law, Ampere's circuital law, curl, Magnetic Flux, Flux Density, Scalar and Vector Magnetic Potentials, Force on a moving charge, Force on different current element, Inductance and Mutual Inductance Magnetic Boundary Condition.

UNIT-5 10 hours

Time varying fields and Maxwell's equations: Faraday's Law, Displacement Current, Maxwell's Equations in Point and Integral Form, Uniform plane waves, Wave equations , solution of wave equation, wave propagation through good dielectric, good conductor, skin depth, Poynting Theorem

This course will include lecture from QEEE followed by a suitable QUIZ

Text books:

1. Engineering Electromagnetics,W H Hayt, J A Buck, MJaleelAkhtar Tata McGraw-Hill, 8th Edition, 2014.
2. Electromagnetics, Schaum's Outline series Joseph A Ediminister Tata McGraw-Hill, revised second Edition, 2014.

Reference books:

1. Electromagnetics with Applications, John Krauss and Daniel A Fleisch, McGraw-Hill, 5th Edition, 1999.
2. “Field and wave electromagnetic”, David K Chary, Pearson Education Asia, Second Edition – 1989, Indian Reprint – 2001

Video links:

1. NPTEL Video Lecture On Electromagnetic Theory By Dr. HarishankarRamachandran, IIT Madras. http://www.nptel.ac.in/courses/108106073/
2. Phillips P., Engineering Dielectrics Volume IIA Electrical Properties of Solid Insulating Materials: Molecular Structure and Electrical Behaviour.

   http://www.astm.org/DIGITAL_LIBRARY/STP/SOURCE_PAGES/STP783.htm

Course outcomes

At the end of the course ,the student will have the ability to

CO-1: Apply the fundamental Knowledge of electrostatics
CO-2: Apply the fundamental Knowledge of magneto-statics
CO-3: Formulate and analyze problems involving different media with boundaries using uniform plane wave

B.M.S COLLEGE OF ENGINEERING, BENGALURU-19

(Autonomous College under VTU)

DEPARTMENT OF ELECTRICAL & ELECTRONICS ENGINEERING

Course Title	Simulation Lab -I				
Course Code	15EE3DCSL1	Credits	1	L-T-P-S	0-0-1-0
CIE	50 Marks(100% weightage)	SEE	100 Marks(50% weightage)		

Part A Experiments (MATLAB)

1. Introduction: The MATLAB Environment, MATLAB as a calculator, Syntax and Semantics, Help, Plotting, Publishing. Introduction to matrices and operators, the colon operator, accessing parts of a matrix, combining matrices, Arithmetic operations, operator precedence.
2. Introduction to functions, function I/O, definitions of functions, scope, advantages, scripts, File I/O, MAT files, excel files, text files, binary files.
3. Signal generation, determination of the signal parameters. Three dimensional visualization of functions.
4. Analysis of electrical networks in steady state.
5. Transient analysis of electrical systems.

Part B Experiments (SIMULINK)

1. Introduction: Simulink as a tool box, steps involved in creating systemmodels using the simulink library, solver selection, creating model hierarchy.
2. Mathematical modeling of physical systems
3. Realization of Boolean expression.
4. Analysis of electrical systems under transient conditions. Transfer of variables between Simulink and MATLAB workspace.
5. Realization of Uncontrolled and controlled rectifiers, determination of parameters associated with the output.

B.M.S COLLEGE OF ENGINEERING, BENGALURU-19

(Autonomous College under VTU)

DEPARTMENT OF ELECTRICAL & ELECTRONICS ENGINEERING

Course outcomes

At the end of the course ,the student will have the ability to

CO-1:	Navigate the MATLAB user interface, enter commands, Create access, modify, perform calculations, and visualize matrix data and customize plots.
CO-2:	Import data from files, write and debug scripts and create functions.
CO-3:	Visualize and interpret three dimensional plots of functions and responses of electrical systems.
CO-4:	Create and simulate a model of a physical system
CO-5:	Create mathematical models of systems such as controlled and uncontrolled rectifiers and determine the parameters associated with the output signal.
CO-6:	Interact with MATLAB workspace.

B.M.S COLLEGE OF ENGINEERING, BENGALURU-19

(Autonomous College under VTU)

DEPARTMENT OF ELECTRICAL & ELECTRONICS ENGINEERING

Course Title	Discrete Mathematics and Probability (Common to ECE/EEE/IT/ML/TCE)				
Course Code	15MA4GCDMP	Credits	4	L-T-P-S	3:1:0:0
CIE	50 Marks(100% weightage)	SEE	100 Marks(50% weightage)		

Prerequisites:

Basic concepts of set theory, relations and functions, Matrices, Basic concepts of probability, addition theorem, conditional probability, Bayes' theorem, discrete random variable, Binomial distribution

UNIT-1 12 hours

SET THEORY AND RELATIONS :

Introduction to sets and subsets, operations on sets, laws of set theory. Duality, Principle of duality for the equality of sets. Countable and uncountable sets. Addition Principle.

Introduction to Relations. Definition, Types of functions, operations on relations, matrix representation of relations, composition of relations, properties of relations, equivalence relations, partial orders, Hasse diagram. Posets- extremal elements on posets.

(9L+3T)

Suggested Reading: Some particular functions- Floor and ceiling functions, Projection, Unary and Binary operations.

UNIT-2 10 hours

ALGEBRAIC STRUCTURES: Groups, properties of groups. Some particular groups- The Klein 4-group, additive group of integers modulo n, multiplicative group of integers mod p, permutation groups. Subgroups, Cyclic groups, Coset decomposition of a group, homomorphism, isomorphism. (7L+3T)

Suggested Reading: Lagrange's theorem and its consequences.

UNIT-3 9 hours

GRAPH THEORY :

Basic concepts: Types of graphs, order and size of a graph, in-degree and out-degree, connected and disconnected graphs, Eulerian graph, Hamiltonain graphs, subgraphs, dual graphs, isomorphic graphs. Matrix representation of graphs: adjacency matrix, incidence matrix. Trees: spanning tree, breadth first search. Minimal spanning tree: Kruskal's algorithm, Prim's algorithm, shortest path-Dijkstra's algorithm.

(7L+2T)

Suggested Reading: Konigsberg bridge problem, Utility problem.

UNIT-4 8 hours

PROBABILITY: Theoretical distributions: Poisson distribution, Normal distribution: Error function, Central limit theorem.

Two dimensional random variables: Discrete random variable, Mathematical expectation, Covariance and Correlation. (6L+2T)

Suggested Reading: Exponential distribution, Uniform distribution. Continuous two dimensional random variables.

UNIT-5 9 hours

MARKOV CHAIN AND QUEUING THEORY :

Markov Chain, Probability vectors, stochastic matrices, fixed point vector, regular stochastic matrices. Higher transition probabilities, stationary distribution of regular Markov chains.Queuing models: Concept of Queue, M/M/1 queuing systems.

(7L+2T)

Suggested Reading: Power supply model, Economic cost profit model.

Mathematics Lab

- Probability distributions
- Minimal spanning tree- Kruskal's algorithm, Prim's algorithm.
- Shortest Path- Dijkstra's algorithm

Text books:

1. Discrete Mathematical Structures, Dr. DSC, 4th edition, 2011-12, Prism Engineering Education Series.
2. Higher Engineering Mathematics, B.S. Grewal, 43rd edition, 2013, Khanna Publishers.
3. Discrete Mathematics, Seymour Lipschutz. M. Lipson, 2005, Tata McGraw Hill.

Reference books:

1. Higher Engineering Mathematics, B.V. Ramana, 2007, Tata Mc. Graw Hill.
2. Discrete Mathematics, J K Sharma, 3rd edition, 2013, Macmillan India Ltd.
3. Queuing Theory and Telecommunications, Networks and applications, Giovanni Giambene, 2005, Springer
4. Data Networks, DimitriBertsekas, Robert Gallager, 2nd edition, 1992, Prentice India
5. Schaum's Outline of Probability and Statistics, John J Schiller, Murray R Speigel, 4th edition, 2013, Schaum's Outlines

E Books:

1. Discrete Mathematics for Computer Science, Gary Haggard, John Schlipf, Sue Whitesides, Thomson Brooks/Cole, 2006
2. (1) http://www.khanacademy.org/math/probability/random-variablestopic/ random_variables_prob_dist/v/random-variables
3. http://ocw.mit.edu/courses/mathematics/ (online course material)

Moocs:

1. www.nptelvideos.in/2012/11/discrete-mathematical-structures.html
2. www.cs.berkeley.edu/~daw/teaching/cs70-s05
3. https://www.khanacademy.org/

Course outcomes

At the end of the course ,the student will have the ability to

CO-1: Understand the notation of set theory, relations and functions.
CO-2: Construct a Hasse diagram for partial orderings, Use many terms associated with graphs and prove whether two graphs are isomorphic.
CO-3: Obtain the probability of an event using discrete and continuous distributions, including the n-step transition probability.
CO-4: Analyse and classify simple states (recurrent/transient)
CO-5: Understand, derive and apply the properties of the M/M/m queuing model (properties like stationary probability, average waiting and system time, expected number of customers in the queue)

Alternate Assessment Tool: 20% of CIE marks for the lab.

Question Paper Pattern

1. Each unit consists of one full question.
2. Each full question consists of three or four subdivisions.
3. Five full questions to be answered.
4. Internal choice in unit 2 and unit 3.

B.M.S COLLEGE OF ENGINEERING, BENGALURU-19

(Autonomous College under VTU)

DEPARTMENT OF ELECTRICAL & ELECTRONICS ENGINEERING

Course Title	Analog Integrated Circuits				
Course Code	15ES4GCAIC	Credits	6	L-T-P-S	3-0-1-2
CIE	50 Marks(100% weightage)	SEE	100 Marks(50% weightage)		

Prerequisites:

Elements of Electronics Engineering, Analog Microelectronics

UNIT-1 8 hours

Operational Amplifier Characteristics:

Introduction, DC Characteristics, AC Characteristics, Analysis of data sheets of an OP-AMP

Operational Amplifier Applications:

Review of basic Opampapplications, Instrumental Amplifier, V to I and I to V converter, Op-amp circuits using Diodes - Half wave rectifier, Full wave rectifier, Sample and hold circuit, Multiplier and Divider.

UNIT-2 7 hours

Comparators and Waveform Generators:

Introduction, comparator, Regenerative comparator (Schmitt Trigger), Square wave generator (AstableMultivibrator), MonostableMultivibrator, Triangular wave generator. (RC and Wein bridge oscillators only).

UNIT-3 7 hours

Voltage Regulators:

Introduction, Series op-amp regulator, IC Voltage regulators, 723 General purpose Regulator, Switching Regulator.

Active Filters:

Introduction, RC Active Filters, First order low pass filter, second order active filter, Higher order low pass filter, High pass active filter, All pass filter-phase shift lead and lag circuit

UNIT-4 7 hours

Timers :

Introduction to 555 timer, Description of Functional diagram, monostable operation, astable operation.

Phase locked loops : Introduction, Basic principles, phase detector/comparator, voltage controlled oscillator (VCO)

UNIT-5 7 hours

D-A and A-D Converters:

Introduction, Basic DAC Techniques- Weighted Resistor DAC, R-2R Ladder DAC.

A-D Converters: Direct type ADCs- The parallel Comparator (Flash) A/D converter, Successive Approximation Converter, DAC/ADC Specification, Sigma – delta ADC

Laboratory Experiment List:

Inverting and non- inverting amplifier, voltage follower, Inverting and non- inverting summing Amplifier, Differentiator and integrator, Precision half wave and full wave rectifier, Zero crossing detector and Schmitt trigger, Weinbridge Oscillator, First order active low pass filter, First order active high pass filter, 555 as astable multivibrator, 555 as monostable multivibrator, IC 723 as low voltage and high voltage regulators, D to A convertor, A to D convertor, Clipping Circuits, Clamping Circuits

Text books:

1. Linear Integrated Circuits-D.RoyChoudhury&ShailB.Jain(New age Publication)
2. OP-Amps and Linear Integrated Circuits-Ramakanth A.Gayakwad, 4th edition, PHI

Reference books:

1. Linear Integrated Circuits-S.Salivahanan&V.S.KanchanaBhaaskaran (Tata McGraw-Hill Publication)
2. Opamps and Linear ICs-David A.Bell (Prentice-Hall Publications)

E Books:

1. http://freevideolectures.com/Course/2321/Electronics-for-Analog-Signal-Processing-I
2. http://freevideolectures.com/Course/2322/Electronics-for-Analog-Signal-Processing-I

Moocs:

1. http://ocw.tudelft.nl/courses/microelectronics/analog-integrated-circuit-design/course-home/
2. Introductory Analog Electronics Laboratory (Spring 2007) by MIT Open Courseware | Reviews and Ratings
3. http://www.pannam.com/blog/free-resources-to-learn-electrical-engineering/

Course outcomes

At the end of the course ,the student will have the ability to

CO-1:	Define, understand and explain the DC and AC performance characteristics of Opamp, applications of Opamp, working of 555 timer and voltage regulators.
CO-2:	Apply the knowledge of KVL and KCL to obtain voltage /current/waveform at different points in analog electronic circuits such as Opampamplifiers, rectifiers, filters, waveform generators, PLL, data converters, regulators, comparators ,555 timers.

CO-3: Analyze analog electronic circuits such as Opamp amplifiers, rectifiers, filters, waveform generators, PLL, data converters, regulators, comparators, and 555 timers etc to obtain voltage/current/waveform at different points that meet desired specifications.
CO-4: Design analog electronic circuits such as Opamp amplifiers, rectifiers, filters, waveform generators, PLL, data converters, regulators, comparators ,555 timers etc. that meet desired specifications.
CO-5: Conduct experiments using analog electronic components, electronic instruments to function as amplifiers, comparators, rectifiers, filters, astable and monostable circuits using 555, data converters.
CO-6: Engage in self-study/independent study to formulate, design, implement, analyze and demonstrate an application using analog electronic components/ASLK/Multisim through a mini-project and submit the mini-project and make an oral presentation of the work.

B.M.S COLLEGE OF ENGINEERING, BENGALURU-19

(Autonomous College under VTU)

DEPARTMENT OF ELECTRICAL & ELECTRONICS ENGINEERING

Course Title	MICROCONTROLLERS				
Course Code	15ES4GCMCS	Credits	6	L-T-P-S	3-0-1-2
CIE	50 Marks(100% weightage)	SEE	100 Marks(50% weightage)		

Prerequisites:

Elements of Electronics Engineering, Digital Electronics

UNIT-1 7 hours

INTRODUCTION TO MICROCOMPUTER AND MICROCONTROLLER:

Introduction to Microprocessors, Internal organization of computer- Bus Structures, Harvard & Von-Neumann CPU architecture, The 8051 Architecture: Introduction, 8051 Microcontroller Hardware, Input / Output Pins, External Memory Interface.

UNIT-2 8 hours

MICROCONTROLLER PROGRAMMING:

Instruction set architecture-RISC & CISC CPU Architectures, Pipelining, Execution of an instruction, Addressing Modes and Instruction set. Example Demonstration using 8051 instruction set, Data transfer instructions, Arithmetic instructions, Logical instructions, Branching and Subroutines, Example programs.

UNIT-3 8 hours

CONCEPTS OF EMBEDDED 'C' PROGRAMMING:

Data types, examples in 8051 C, program structures, logical operations, Memory and I/O access, Programming peripherals (Examples: Timer / Counter), Programming serial communication (serial data input/output) - example programs using 8051

UNIT-4 7 hours

INTERRUPTS AND INTERRUPT PROGRAMMING:

Concept of Interrupts,Interrupts in 8051. Programming Timer Interrupts, Programming External Hardware Interrupts, Programming Serial Communication Interrupts

UNIT-5 6 hours

INTERFACING AND APPLICATIONS:

Interfacing 8051 to LCD, DAC, ADC Stepper motor interfacing.Applications of microcontrollers.

LABORATORY EXPERIMENTS:

Part A: Data Transfer, Logical-Byte/Bit manipulations, Jump and Subroutine Calls usingAssembly language, counters and delay generation using timers, Embedded C programs

Part B: Interfacing: LCD Display, Stepper motor control, logical interface, 7 segment interface, DAC and keyboard.

Text books:

1. “The 8051 Microcontroller Architecture, Programming &Applications”,Kenneth J. Ayala 2e, Thomson Learning 2005
2. “The 8051 Microcontroller and Embedded Systems – using assembly and C”, Muhammad Ali Mazidi and Janice Gillespie Mazidi and Rollin D. McKinlay; PHI, 2006

Reference books:

1. 'Computer Organization and Architecture', Carl Hamacher, McGrawHill, 5th Edition
2. http://cnx.org/contents/dadb4fd5-8390-4323-a056-f6381587e89a@1/Microcontroller%288051%29-Lab

E Books:

1. nptel.ac.in/courses/Webcourse-contents/IIT.../microcontrollers
2. http://freevideolectures.com/Course/3018/Microprocessors-and-Microcontrollers

Moocs:

1. Embedded Systems - Shape The World-https://www.edx.org/course/embedded-systems-shape-world-utaustinx-ut-6-02x
2. Electronic Interfaces: Bridging the Physical and Digital Worlds-https://www.edx.org/course/electronic-interfaces-bridging-physical-uc-berkeleyx-ee40lx-0

Course outcomes

At the end of the course ,the student will have the ability to

CO-1:	Understand and explain computer based and memory based architecture, microcontroller, pipelining, addressing modes, data types in Embedded C, basics of serial communication, timer configuration and interrupt handling
CO-2:	Calculate instruction execution time, delay, baud rate, and write assembly and C Code, identify the timer mode, serial communication mode and interrupt priorities
CO-3:	Debug/ analyze the code in assembly as well as Embedded C
CO-4:	Identify the IDE to conduct experiments by simulating, debugging and executing the assembly and Embedded C code
CO-5:	Engage in independent study/ self-study by preparing a 5 min video on 'Applications of Microcontrollers for health, safety, environment and society'
CO-6:	Work as an individual and as a team-member to design, formulate and implement experiments using microcontroller through conduction of an Open-Ended experiments

B.M.S COLLEGE OF ENGINEERING, BENGALURU-19

(Autonomous College under VTU)

DEPARTMENT OF ELECTRICAL & ELECTRONICS ENGINEERING

Course Title	CONTROLSYSTEMS				
Course Code	15ES4GCCST	Credits	4	L-T-P-S	3:1:0:0
CIE	50 Marks(100% weightage)	SEE	100 Marks(50% weightage)		

Prerequisites:

Linear Circuit Analysis, Engineering Mathematics I & II, Advanced Mathematics

UNIT-1 9+3 hours

Introduction:

ExamplesofControlSystems,openloopvsClosedloopSystems,MathematicalModelingofLinearSystems:Transferfunctions,MechanicalSystems, Analogous Systems, Block diagram, Signal Flow graph, Compensators: Lag, Lead(obtaining transfer functions only).

UNIT-2 6+3 hours

Controllers &Time response analysis:

Step response of first order, second order systems, response specification, steady state error and error constants. Example of effect of P-I controllers on the time response

UNIT-3 9+2 hours

Stability Analysis:

Concept of stability, R Hcriterion, applications of R Hcriterion with limitations, Nyquistplot, Polarplots, Stability Analysis using Nyquistcriterion

UNIT-4 6+2 hours

Rootlocus technique:

Introduction to rootlocus concepts, Construction rules, Analysis of stability by rootlocusplot

UNIT-5 6+2 hours

Frequency response Analysis:

Bode plots, Relative stability, Frequency domain specification.

Text books:

1. Control Engineering by Nagrath & Gopal, New Age International Publishers
2. Engineering control systems - Norman S. Nise, John WILEY & sons , fifth Edition

Reference books:

1. Modern control Engineering-Ogata,PrenticeHall
2. Automatic Control Systems- B.CKuo, John Wiley and Sons

E Books:

1. http://en.wikibooks.org/wiki/Control_Systems
2. http://www.electrical4u.com/control-system-closed-loop-open-loop-control-system/#practical-examples-of-open-loop-control-system
3. http://www.facstaff.bucknell.edu/mastascu/eControlHTML/CourseIndex.html

Moocs:

1. www.nptel.com/IITK
2. https://www.edx.org/course/
3. http://nptel.ac.in/courses/108103007/1

Course outcomes

At the end of the course ,the student will have the ability to

CO-1: Obtain mathematical models of open loop and closed loop physical systems
CO-2: Apply mathematical techniques to perform time response analysis of a control system
CO-3: Carry out stability analysis using different mathematical techniques

B.M.S COLLEGE OF ENGINEERING, BENGALURU-19

(Autonomous College under VTU)

DEPARTMENT OF ELECTRICAL & ELECTRONICS ENGINEERING

Course Title	SIGNALS AND SYSTEMS				
Course Code	15ES4GCSAS	Credits	4	L-T-P-S	3:1:0:0
CIE	50 Marks(100% weightage)	SEE	100 Marks(50% weightage)		

Prerequisites:

Linear Circuit Analysis, Engineering Mathematics I & II, Advanced Mathematics

UNIT-1 10 hours

INTRODUCTION: Definitions of a signal and a system, classification of signals, basic operations on signals, elementary signals, Systems viewed as Interconnections of operations, properties of systems.

UNIT-2 10 hours

TIME-DOMAIN REPRESENTATIONS FOR LTI SYSTEMS: Convolution, impulse response representation, Convolution Sum and Convolution Integral, Properties of impulse response representation, Differential and difference equation Representations, Block diagram representations.

UNIT-3 8 hours

FOURIER SERIES: Introduction, Discrete time and continuous time Fourier series (derivation of trigonometric Fourier series representation are excluded), Properties of Fourier series (No proof), Applications of Fourier series. Sampling Theorem and Reconstruction

UNIT-4 10 hours

FOURIER TRANSFORM: Discrete and continuous Fourier transforms & their properties (With proof). Fourier transform representation of periodic signals, Applications of Fourier transform, Frequency response of LTI systems. Laplace Transform and its Applications.

UNIT-5 10 hours

Z-TRANSFORMS: Introduction, Z – transform, properties of ROC & Z – transforms Inverse Z–transforms, unilateral Z- Transform, analysis of LTI Systems and application to solve Difference equations.

Text books:

1. Simon Haykin and Barry Van Veen “Signals and Systems”, John Wiley & Sons, 2001.Reprint 2002
2. Alan V Oppenheim, Alan S, Willsky and A Hamid Nawab, “Signals and Systems” Pearson Education Asia / PHI, 2nd edition, 1997. Indian Reprint 2002

Reference books:

1. H. P Hsu, R. Ranjan, “Signals and Systems”, Scham's outlines, TMH, 2006
2. B. P. Lathi, “Linear Systems and Signals”, Oxford University Press, 2005
3. Ganesh Rao and SatishTunga, “Signals and Systems”, Sanguine Technical Publishers, 2004

E Books:

1. NPTEL lecture Video on Signals and Systems by Prof. S.C.Dutta Roy, http://www.satishkashyap.com/2012/04/iit-video-lectures-on-signals-and.html
2. NPTEL lecture Video on Signals and Systems by Prof. T.K. Basu,IIT Kharagpur. http://www.nptel.ac.in/courses/108105065/
3. NPTEL on line Course Modules–IIT Bombay –Signals and Systems http://www.cdeep.iitb.ac.in/nptel/Electrical%20&%20Comm%20Engg/Signals%20and%20System/TOC-M1.html

Moocs:

1. https://www.edx.org/course/signals-systems-part-1-iitbombayx-ee210-1x-0
2. https://www.edx.org/course/signals-systems-part-2-iitbombayx-ee210-2x-0

Course outcomes

At the end of the course ,the student will have the ability to

CO-1:	Apply the knowledge of mathematics and engineering to analyze and obtain the response of continuous and discrete time systems.
CO-2:	Analyze Continuous Time and Discrete Time signals and systems in Frequency domain using Fourier analysis tools like CTFS, CTFT, DTFS and DTFT
CO-3:	Analyze Discrete Time systems using Z-transforms.

B.M.S COLLEGE OF ENGINEERING, BENGALURU-19

(Autonomous College under VTU)

DEPARTMENT OF ELECTRICAL & ELECTRONICS ENGINEERING

Course Title	Simulation Lab -II				
Course Code	15EE4DCSL2	Credits	01	L-T-P-S	0:0:1:0
CIE	50 Marks(100% weightage)	SEE	100 Marks(50% weightage)		

Simulation Experiments

1. To find the resonance frequency, band width and Q factor of the given RLC series and parallel circuit.
2. Application of circuit theorems for a given electrical network and visualize the results.
3. Design and analysis of an amplifier circuit.
4. Design and analysis of an oscillator circuit.
5. Verification of voltage and current relationships in a three phase AC system.
6. Simulation and analysis of Inverting and Non inverting amplifier.
7. Simulation of a Schmitt trigger circuit.
8. Stability studies of a system using Bode plot.
9. Simulation of diode clipping and clamping circuits.

Course outcomes

At the end of the course ,the student will have the ability to

CO-1: Develop simulation circuit for a given electric network and verify KVL and KCL.
CO-2: Design and analysis of power amplifier, Inverting and Non inverting amplifiers and oscillator circuit through simulation.
CO-3: Develop circuit model to analyze a second order system and perform stability studies
CO-4: Develop circuit model and apply circuit theorems.

B.M.S COLLEGE OF ENGINEERING, BENGALURU-19

(Autonomous College under VTU)

DEPARTMENT OF ELECTRICAL & ELECTRONICS ENGINEERING

Course Title	Mathematics-I (All Branches)				
Course Code	15MA3GCAEM	Credits	0	L-T-P-S	0:0:0:0
CIE	100 marks (100% weightage)				

Pre-requisites:

Basic concepts of Trigonometry, Trigonometricformulas,concept of differentiation, concept of integration

UNIT I [9 hours]

DIFFERENTIAL AND INTEGRAL CALCULUS:

List of standard derivatives including hyperbolic functions, rules of differentiation. Differentiation of product of two functions using Leibnitz rule (direct problems). Taylor's and Maclaurin's series expansion for functions of single variable. List of standard integrals, integration by parts. Definite integrals – problems. (7L+2T)

UNIT II [08 hours]

FIRST ORDER ORDINARY DIFFERENTIAL EQUATIONS :

Introduction to first order differential equations. Linear equation and its solution. Bernoulli's equation and its solution. Exact differential equation and its solution. Orthogonal Trajectories. (6L+2T)

UNIT IV [9 hours]

SECOND AND HIGHER ORDER ORDINARY DIFFERENTIAL EQUATIONS:Ordinary differential equations with constant coefficients: Homogeneous differential equations, non-homogeneous differential equations – Particular integral for functions of the type f (x) = e^{ax}, sin(ax), cos(ax), x^n, e^{ax}sin(bx), e^{ax}cos(bx). Method of variation of parameters. Cauchy's and Legendre differential equations. (7L+2T)

UNIT V [8 hours]

VECTOR CALCULUS AND ORTHOGONAL CURVILINEAR COORDINATES (OCC) :

Recapitulation of scalars, vectors and operation on scalars and vectors. Scalar and vector point functions. Del operator, gradient-directional derivative, divergence, curl and Laplacian operator. Vector identities (without proof). Cylindrical and Spherical polar coordinate systems. Expressing a vector point function in cylindrical and spherical systems. Expressions for gradient, divergence, curl and Laplacian in OCC. (6L+2T)

Text Books:

1. Advanced Engineering Mathematics, Erwin Kreyszig, Wiley Precise Textbook series, Vol. 1 and Vol. 2, 10th edition, 2014, Wiley- India.
2. Higher Engineering Mathematics, B.V. Ramana, 7th reprint, 2009, Tata Mc. Graw Hill.

Reference Books:

1. Higher Engineering Mathematics, B.S. Grewal, 43rd edition, 2014, Khanna Publishers
2. Advanced Engineering Mathematics, 4th edition, 2011, by Dennis G. Zill and Cullen, Jones and Bartlett India Pvt. Ltd.

E Books:

1. Engineering Mathematics, K. A. Stroud, Dexter J. Booth, Industrial Press, 2001 http://books.google.co.in/books/about/Engineering_Mathematics.html?id=FZncL-xB8dEC&rediresc=y.
2. Advanced Engineering Mathematics, P. V. O'Neil, 5th Indian reprint, 2009, Cengage learning India Pvt. Ltd.
3. http://ocw.mit.edu/courses/mathematics/ (online course material)

Moocs:

1. https:// www.khanacademy.org/Math
2. https:// www.class-central.com/subject/math (MOOCS)
3. E-learning: www.vtu.ac.in

Course Outcomes

At the end of the course, the student will have the ability to

CO-1:	Understand the basic concepts of differentiation and integration.
CO-2:	Apply the concepts of polar curves and multivariate calculus.
CO-3:	Apply analytical techniques to compute solutions of first and higher order ordinary differential equations.
CO-4:	Apply techniques of vector calculus to engineering problems.
CO-5:	Comprehend the generalization of vector calculus in curvilinear coordinate system.

B.M.S COLLEGE OF ENGINEERING, BENGALURU-19

(Autonomous College under VTU)

DEPARTMENT OF ELECTRICAL & ELECTRONICS ENGINEERING

Course Title	Mathematics-II (All Branches)				
Course Code	15MA4IMMAT	Credits	0	L-T-P-S	0:0:0:0
CIE	100 marks (100% weightage)				

Pre-requisites:

Basic concepts of Trigonometry, Trigonometricformulas,concept of differentiation, concept of integration.

UNIT I [8 hours]

LAPLACE TRANSFORMS:

Laplace transforms of standard functions. Properties and problems. Laplace Transform of Periodic functions with plotting. Unit step function. (6L+2T)

UNIT II [9 hours]

INVERSE LAPLACE TRANSFORMS:

Inverse Laplace transforms of standard functions. Properties and problems. Solution of ODE-Initial and Boundary value Problems. (7L+2T)

UNIT III [11 hours]

DOUBLE INTEGRAL:

Evaluation of double integral. Change of order of integration. Change of variables to polar coordinates. Application: Area. (8L+3T)

UNIT IV [8 hours]

TRIPLE INTEGRALS AND IMPROPER INTEGRALS:

Evaluation of triple integral. Application: Volume. Gamma and Beta functions-definition Relation between Gamma and Beta functions. Properties and Problems. (6L+2T)

UNIT V [8 hours]

VECTOR INTEGRATION:

Line integral. Green's theorem. Stokes' theorem. Gauss divergence theorem. (6L+2T)

Text Books:

1. Advanced Engineering Mathematics, Erwin Kreyszig, Wiley Precise Textbook series, Vol. 1 and Vol. 2, 10th edition, 2014, Wiley- India.
2. Advanced Engineering Mathematics, 4th edition, 2011, by Dennis G. Zill and Cullen, Jones and Bartlett India Pvt. Ltd

Reference Books:

1. Higher Engineering Mathematics, B.S. Grewal, 43rd edition, 2014, Khanna Publishers.
2. Higher Engineering Mathematics, B.V. Ramana, 7th reprint, 2009, Tata Mc. Graw Hill.

E Books:

1. (1) Engineering Mathematics, K. A. Stroud, Dexter J. Booth, Industrial Press, 2001 http://books.google.co.in/books/about/Engineering_Mathematics.html?id=FZncL-xB8dEC&redir_esc=y.
2. Advanced Engineering Mathematics, P. V. O'Neil, 5th Indian reprint, 2009, Cengage learning India Pvt. Ltd.
3. http://ocw.mit.edu/courses/mathematics/ (online course material)

Moocs:

1. https:// www.khanacademy.org/Math
2. https:// www.class-central.com/subject/math (MOOCS)
3. E-learning: www.vtu.ac.in

Course Outcomes

At the end of the course, the student will have the ability to

CO-1: Use Laplace transforms to solve differential equations.
CO-2: Apply double integrals to compute areas.
CO-3: Learn to use triple integrals in computing volumes.
CO-4: Use Gamma and Beta functions to evaluate integrals.
CO-5: Understand the use of integral calculus in scalar and vector fields.

AssessmentPattern

Continuous Internal Evaluation (CIE)includestest, quiz, assignment, seminar, term paper, open ended experiments, mini-projects, two minute videos, MOOCs etc.

Alternative Assessment:

Alternative Assessment Tool (AAT)includes seminar, assignments, term paper, open ended experiments, mini-projects, two minute videos, MOOCs etc.

Semester End Examination(SEE)– A written examination for theory courses and practical/design examination with built-inoralpart(Viva-Voce).

Both CIE and SEE have equal(50:50)weightage. The Student's performance in a course shall be judged individually and to gether based on the results of CIE and SEE.

B.M.S COLLEGE OF ENGINEERING, BENGALURU-19

(Autonomous College under VTU)

DEPARTMENT OF ELECTRICAL & ELECTRONICS ENGINEERING

ASSESSMENT PATTERNS WITH 20% WEIGHTAGE FOR AAT

Assessment pattern for Regular/Normal courses:

COMPONENT	THEORY		TOTAL MARKS
Type of Assessment	Test	Quiz or AAT	
Max.CIE Marks	40	10	50

Assessment pattern for Integrated Courses:

COMPONENT	THEORY		PRACTICAL			Total Marks
Type of Assessment	Test	Quiz or AAT	Records & Performance	Lab Test	Viva-voce/ AAT	
Max.CIE Marks	20	05	10	10	05	50

Assessment pattern for Comprehensive Courses (Applicable for the batches admitted from 2014-15 onwards):

COMPONENT	THEORY (50%)		PRACTICAL (30%)		Self- Study (20%)	Total Marks
Type of Assessment	Test	Quiz or AAT	Lab Performance/ Record	Lab Test		
Max.CIE Marks	20	05	10	05	10	50

ASSESSMENT PATTERNS WITH 40% WEIGHTAGE FOR AAT

A faculty, who wishes to design AAT with more than 20% weightage, shall create a new pattern for assessment indicating weightages for all the three components.

Note: Students musts ecurea minimum of40% in CIE andshouldhave85% attendance. Incase of integrated and comprehensive courses, a student musts ecurea minimum of40% marks and85% attendance in both theory and practical components. In addition, the overall CIE marks including theory, practical and self-study components shall not be less than 40%.

Note - For a detailed Assessment pattern refer Rules and Regulation book (2015-16)

ಬಿ.ಎಂ.ಎಸ್. ತಾಂತ್ರಿಕ ಮಹಾವಿದ್ಯಾಲಯ, ಬೆಂಗಳೂರು

(ಸ್ವಾಯತ್ತ ವಿದ್ಯಾ ಸಂಸ್ಥೆ)

ಬುಲ್ ಟೆಂಪಲ್ ರಸ್ತೆ, ಬೆಂಗಳೂರು – 560 019

BMS COLLEGE OF ENGINEERING

(Autonomous college under VTU)

BENGALURU-560019

ELECTRICAL & ELECTRONICS ENGINEERING

SchemeV-VI Semester

Syllabus V-VI Semester

2014-2018

BMSCOLLEGEOFENGINEERING,BENGALURU

AutonomousCollegeunderVTU

VISION	MISSION
Promotingprosperity of mankind by augmenting human resource capital through quality technical education& training	Accomplish excellence in the field of technical education through education, research and service needs of society

DEPARTMENT OF ELECTRICAL & ELECTRONICS ENGINEERING

THIRD YEAR SYLLABUS BOOK

With effect from A. Y. 2016 – 17

AY	Academic Year
AAT	Alternative Assessment Tools
BOE	Board of Examiners
BOS	Board of Studies
CBCS	Choice Based Credit System
CGPA	Cumulative Grade Point Averages
CIE	Continuous Internal Evaluation
CO	Course Outcomes
DC	Departmental Core
GC	Group Core
HSS	Humanity and Social Science Courses
IC	Institutional Core
IE	Institutional Elective
IL	Institutional Lab
LTPS	Lecture-Tutorial-Practical-Self Study
NFTE	Not Fit for Technical Education
PCC	Professional Core Courses
PEC	Professional Elective Courses
PEO	Program Educational Objectives
PO	Program Outcomes
SEE	Semester End Examination
SGPA	Semester Grade Point Average
ST	Studio

DEPARTMENT VISION	DEPARTMENT MISSION
Facilitating the development of competent professionals capable of adapting to the constantly changing global scenario in the field of Electrical Sciences	• Impart quality technical education and encourage research in the field of Electrical Sciences. • Empower every individual to developasa professional with an ability toapply his/her knowledge and skills toadapt to the evolving technological requirements of society.

PROGRAMEDUCATIONAL OBJECTIVES (PEOs)

The PEOs have been evolved in alignment with the vision and mission of the Department. The broad objective of the program isto facilitate the development of competent and successful professionals in tune with modern day technological and societalrequirements.
Therefore, after concerted interactions (both formal and informal) with all major constituents including Alumni, Employers, expertsfrom industry and institutions, faculty and students, parents etc., the followingProgram Educational Objectives of the UG course offered by Electrical and Electronics Engineering department have beenarrived at:

The PEOs of the program are as under:

1. **PEO-1:**Possess successful careers in Electrical Sciences, and allied areas and pursue higher education with a broad knowledge base in Mathematics and Engineering principles.

2. **PEO-2:**Utilize their technical, analytical, communicative and managerial skills and knowledge for societal progress and enrich them to keep in pace with relevant advancements by engaging themselves in lifelong learning.

3. **PEO-3:** Exhibit professionalism by displaying competence, leadership, dedication and commitment.

Program Outcomes

Program outcomes (POs), are attributes acquired by the students at the time of graduation. The POs given in the table below, ensure that the POs are aligned to the Graduate Attributes (GAs) specified by National Board of Accreditation (NBA). These attributes are measured at the time of graduation and hence computed every year for outgoing batch. The POs are addressed and attained through the Course Outcomes (COs) of various courses of the curriculum.

MAPPING OF COURSES TO PROGRAM OUTCOMES

Program Outcomes		Courses
PO-1	Apply the knowledge of mathematics, science, and engineering principles to the solution of electrical and allied engineeringproblems.	Basic Electrical Engg, Linear Circuit analysis, Field Theory , Signals and Systems, Digital Signal Processing, Modern Control Theory
PO-2	Formulate and analyze complex engineering problems using first principles of mathematics, physical and engineering sciences.	Linear Circuit analysis, Field Theory ,Signals and Systems, Digital Signal Processing, Modern Control Theory, Electrical Energy Systems, Transmission and Distribution
PO-3	Design solutions for complex engineering problems, and design system components that meet specific societal needs.	Digital Signal Processing ,Microcontrollers,Power Systems I &II,Power Electronics I & II, Electrical Machines I and II, Switch Gear Protection, Electrical Energy Systems
PO-4	Design and conduct experiments and analyze and interpret data for complex systems.	Electrical Energy Systems, Power Systems I &II,Analog Micro Electronics ,Digital Electronics,Analog Integrated Circuits , Microcontrollers , Digital Signal Processing ,Electrical Machines I & II, Modern Control Theory,
PO-5	Select and apply appropriate modern engineering tools to complex engineering activities with an understanding of the limitations.	SIM LAB1,SIM LAB2,MC1&2, Power Systems I & II, Power Electronics I & II,MCT, Microcontrollers , Digital Signal Processing
PO-6	Apply reasoning informed by contextual knowledge to assess societal health, safety, legal and consequent responsibilities relevant tothe professional engineering practice.	Professional Practices in Electrical Tech, Transmission and Distribution
PO-7	Understand the impact of the professional engineering solutions in societal and environmental contexts, and demonstrate theknowledge of, and need for sustainable development.	Electrical Energy Systems, Professional Practices in Electrical Tech

PO-8	Understand ethical principles and social issues.	Professional Practices in Electrical Tech,ProfessionalEthics , Electrical Energy Systems
PO-9	Function effectively as an individual, and as a member or leader in diverse teams to accomplish a common goal.	Projects, Self-study
PO-10	Communicate effectively with diverse audiences and able to write effective reports and design documentation.	Seminars,Projects,Self-study
PO-11	Demonstrate knowledge and understanding of the engineering and management principles and apply these to one's own work, as amember and leader in a team, to manage projects in multi-disciplinary environments.	Project Management,Projects
PO-12	Recognize the need to engage in independent and lifelong learning in the context of technological change.	Self-Study Component, Participation In Extension Lectures,Value Added Courses, Workshops.

PROGRAM SPECIFIC OUTCOMES

The students will have the ability to:

PSO1:Developmodels,analyze and assess the performance of different types of generation, transmission,distribution and protection mechanisms in power systems**.**

PSO2: Design, develop, analyze and test electrical and electronics systems; deploy control strategies for power electronics related and other applications.

PSO3: Measure, analyze, model and control the behavior of electrical quantities associated withconstituents of energy or allied systems.

MAPPING OF COURSES TO PROGRAM SPECIFIC OUTCOMES

PSO	Courses
PSO1: Develop models, analyze and assess the performance of different types of generation, transmission distributionand protection mechanismsin power systems.	Transmission and Distribution Electrical Energy Systems Power systems 1 Power systems 2 Switchgear and Protection
PSO2: Design, develop, analyze and test electrical and electronics systems; deploy control strategies for power electronics related and other applications.	Machines-I & II, Power Electronics-I &II+Lab+SS Microcontrollers+Lab+SS Signals and Systems Analog Micro Electronics+Lab+SS Digital Electronics +Lab+SS
PSO3: Measure, analyze, model and control the behavior of electrical quantities associated with constituents of energy or allied systems.	Analog integrated circuits + Lab+SS Linear circuit analysis Digital Signal Processing + Lab + SS Field Theory Control systems Modern control theory Controls and Measurements Lab Simulation Lab I & II

CREDIT SUMMARY

2014-2018 Batch

Sem	HSS	BSC	ESC	PCC		PEC		IEC	Project	Seminar/ Internship	Total
				DC	GC	DE	CE				
I	02	10	13	-		-		-	-	-	**25**
II	03	09	13	-		-		-	-	-	**25**
III	-	04	-	01	20	-		-	-	-	**25**
IV	-	04		01	20	-		-	-	-	**25**
V	-	-	-	22		03		-	-	-	**25**
VI	-	-	-	19		03	03	-	-	-	**25**
VII	-	-	-	12		03	03	03	04	-	**25**
VIII	04	-	-	03	03			03	10	02	**25**
Total	**09**	**27**	**26**	**58**	**43**	**09**	**06**	**06**	**14**	**02**	**200**

V Semester Scheme

Sl. No.	Course Code	Course Title	Credits				
			L	T	P	S	Total
1	16EE5DCTND	Transmission and Distribution	3	0	0	0	3
2	16EE5DCMC1	Electrical Machines – I	3	0	1	2	6
3	16EE5DCENS	Electrical Energy Systems	3	0	0	0	3
4	16EE5DCDSP	Digital Signal Processing	3	0	1	2	6
5	16EE5DCMNI	Measurements and Instrumentation	3	0	0	0	3
6	16EE5DCMCL	Measurements and Controls Lab	0	0	1	0	1
7	16EE5DE1XX	Department Elective I	-	-	-	-	3
Total							25

Department Elective -I

Sl. No	Course Code	Course Title	Credits				
			L	T	P	S	Total
1	16EE5DE1ES	Embedded System Design	3	0	0	0	3
2	16EE5DE1HD	Design and implementation of Digital Systems using HDL	2	0	1	0	3
3	16EE5DE1CP	C++ for Engineering Applications	2	0	1	0	3
4	16EE5DE1TC	Electrical Installation, Testing, Commissioning and Maintenance	3	0	0	0	3
Total			10	0	2	0	12

VI Semester Scheme

Sl. No.	Course Code	Course Title	Credits				
			L	T	P	S	Total
1	16EE6DCPS1	Power Systems – I	3	1	0	0	**4**
2	16EE6DCMC2	Electrical Machines – II	3	0	1	2	**6**
3	16EE6DCPE1	Power Electronics-I	3	0	1	2	**6**
4	16EE6DCMCT	Modern Control Theory	2	1	0	0	**3**
5	16EE6DE2XX	Department Elective-II	3	0	0	0	**3**
6	16XX6GE1XX	Cluster Elective – I	-	-	-	-	**3**
Total							**25**

Department Elective- II

Sl. No	Course Code	Course Title	Credits				
			L	T	P	S	Total
1	16EE6DE2UP	Utilization of Electrical Power	3	0	0	0	**3**
2	16EE6DE2CV	Circuit Design using VLSI	3	0	0	0	**3**
3	16EE6DE2CS	Communication Systems	3	0	0	0	**3**
4	16EE6DE2MD	Electric Machine Design	3	0	0	0	**3**
Total			**12**	**0**	**0**	**0**	**12**

Electrical Science Cluster Elective – I:

These set of electives are offered by Electrical Science Cluster and student has an option to choose one among these set of courses, provided he/she has not taken the same course in respective departmental core or departmental electives.

Sl.No	Course Code	Course Title	Credits				
			L	T	P	S	Total
1.	16TE6GE 1DE	Displays for Embedded Systems	3	0	0	0	**3**
2.	16TE6GE1CN	Cryptography and Network Security	3	0	0	0	**3**
3.	16ML6GE1BM	Bio-Mems	3	0	0	0	**3**
4.	16ML6GE1IP	Advanced Medical Image Processing	3	0	0	0	**3**
5.	16EC6GE1DA	Data Structures and Algorithms	2	1	0	0	**3**
6.	16EC6GE1ST	Sensor Technology	3	0	0	0	**3**
7.	16EC6GE1VD	VLSI Testing and Design for Testability	3	0	0	0	**3**
8.	16EC6GE1PD	Physical Design	3	0	0	0	**3**
9.	16EC6GE1PR	Probability & Random process	3	0	0	0	**3**
10.	16EC6GE1AM	Advanced Microcontrollers & Applications	2	1	0	0	**3**
11.	16EE6GE1EM	Electrical & Electronic Engineering Materials	3	0	0	0	**3**
12.	16EE6GE1EC	Electromagnetic Compatibility	3	0	0	0	**3**

		(Except EC and IT)					
13.	16EE6GE1MC	Modern Control Theory (Except EE)	3	0	0	0	**3**
14.	16EI6GE1RT	Robotics	3	0	0	0	**3**
15.	16EI6GE1II	Industrial IOT	3	0	0	0	**3**

NOMENCLATURE FOR THE COURSE CODE

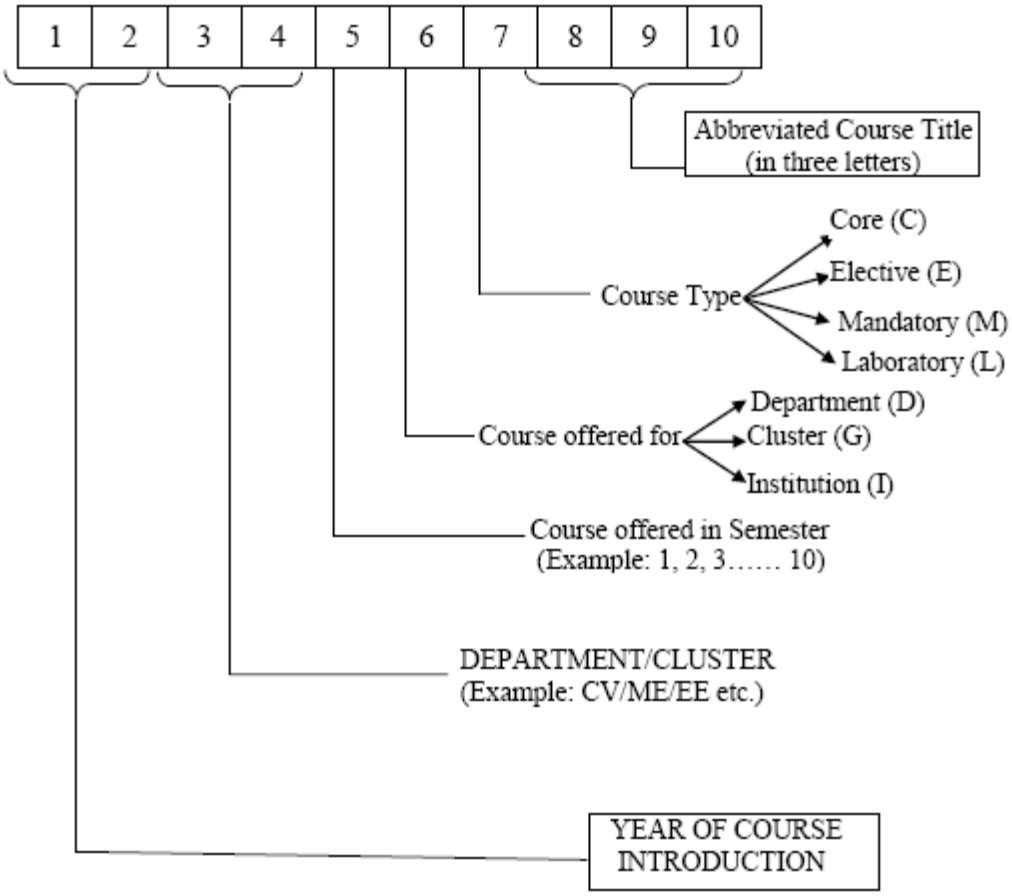

V Semester Syllabus

Course Title	TRANSMISSION AND DISTRIBUTION				
Course Code	16EE5DCTND	Credits	3	L-T-P-S	3-0-0-0
CIE	50 Marks (100% weightage)	SEE	100 Marks(50% weightage)		

Pre-requisites:

Knowledge of Basic Electrical Engineering, Field Theory

Course Description:

This course discusses insulators used for the overhead lines along with the string efficiency and methods to improve it, mechanical design of transmission lines including the sag and tension calculations, wind and ice loadings, insulated cables including the grading and calculation of capacitances in single core and three core cables, The fundamental concepts and detailed calculations of line parameters such as inductances and capacitances, performance analysis of the overhead lines with different equivalent models used for the calculation of regulation and efficiency, types of distributors and grounding system.

UNIT-I		9 hours

Typical Transmission & Distribution systems scheme- Standard voltages for generation, transmission and distribution. Advantages of high voltage transmission. Feeders, distributors &service mains. Mechanical design of Transmission Lines- Types of conductors, conductor materials , Calculation of sag in conductors i) At equal supports ii) At different level supports. Effect of ice covering and wind pressure, factors affecting sag. Overhead Line Insulators-Types of insulators, potential distribution over a string of suspension insulators. String efficiency & methods of improving string efficiency.

UNIT-II		7 hours

Underground cables- General construction of a cable, types of cables, material used, expression for insulation resistance, dielectric stress, power factor, capacitance, charging current of a single core power cable, grading of cables, capacitance grading & inter sheath grading, measurement of capacitance of a three core cable, determination of maximum current carrying capacity of cables.

UNIT-III		8 hours

Line parameters-Calculation of inductance of single phase, 3 phase line with equilateral & unsymmetrical spacing (transposed), calculation of capacitance of a single phase line, 3 phase line with symmetrical and unsymmetrical spacing (transposed) without considering the effect of

earth on transmission line capacitance.		
UNIT-IV		**8 hours**
Performance of power transmission lines- Classification of lines, Short Transmission lines, medium Transmission lines - nominal T method, nominal π method and long transmission lines – Rigorous solution method, ABCD constants of Transmission lines, calculation of voltage regulation and transmission efficiency.		
UNIT-V		**7 hours**
Distribution systems- Classification, radial distribution systems, ring distribution system, DC distribution system with concentrated loads and uniform loading, AC distribution. **Earthing -**Basic terms of earthing, methods of neutral grounding.		
Text books:		
1	Electrical Power Transmission and Distribution- S.SivanagarajuandS.Satyanarayana, Pearson Education,2009	
2	Transmission and Distribution of Electrical Power - J.B.Gupta, S.K.Kataria and sons,10th edition,2012	
Reference books:		
1	**Elements of Power System Analysis**- W.D. Stevenson, Mc.Graw - Hill. Comp.Ltd,1994	
2	**Electric power generation Transmission & Distribution**- Dr. S. N. Singh, PHI learning PvtLtd, New Delhi, 2nd Edition,2010	
3	**Electrical Power Systems**- C.L.Wadhwa, New Age International publishers, 6th Edition,2013	
E Books:		
1	NPTEL courses in Electrical Engineering :Power system generation, Transmission& distribution: Video Lecture Numbers:10,11,12,13,18,19,20,23 by Prof .D. P. Kothari, Centre for Energy Studies ,IIT New Delhi.	

Course outcomes At the end of the course, the student will have the ability to
CO1: Select a suitable insulator & design the transmission line for the required sag.
CO2: Develop mathematical models of the transmission line with different configurations and determine the parameters
CO3: Develop network models of different types of transmission lines and assess their performance.
CO4: Analyze and distinguish different distribution system topologies, underground cable grading and earthing types and their basis for selection.

Course Title	ELECTRICAL MACHINES I				
Course Code	16EE5DCMC1	Credits	6	L-T-P-S	3-0-1-2
CIE	50 Marks (100% weightage)	SEE	100 Marks(50% weightage)		

Pre-requisites:
Electromagnetism, Fundamentals of single phase and three phase ac circuits, basic concepts and operation of Transformers and Three phase Induction motors.

Course Description:

This course provides a basic understanding of AC machinery fundamentals,constructionalfeatures,operational analysis through phasor diagrams, equivalent circuits,determination of performance parameters, testing and applications.

UNIT-I		8 hours

Single Phase Transformers: Ideal transformer- on No Load, on load,{Voltage Current ratios and Vector diagram}, Resistance and leakage reactance, Practical transformer - vector diagram of practical transformer on load, Lumped parameters, Equivalent Circuit model of a transformer-Approximate and simplified, Efficiency and Voltage regulation, Predetermination of efficiency, Voltage regulation and equivalent circuit analysis of single phase transformers by O.C and S.C. test, Sumpner's test.
Parallel operation of two single phase transformers and load sharing, Auto transformer. Output Equation of single phase transformers, area of iron and copper, number of turns

UNIT-II		8 hours

Three Phase Transformers and AC armature windings

a) Three Phase Transformers - Three phase transformer connections – star-star, star-delta, delta-star, delta-delta, open delta (V-V), choice of three phase transformer connection, Scott connection-3 phase to 2phase and vice-versa.

b) AC armature windings -Terminology and Types, Winding factors, EMF generated, MMF distribution, slot harmonics, Concept of rotating magnetic field (Mathematical proof) in poly phase AC machines, Production of torque- electromagnetic and reluctance torque.

UNIT-III		9 hours

Three phase Induction Motor - Principle of operation-slip, frequency of rotor current/EMF, speed of rotor field, rotor EMF, rotor current and power factor. Rotor Torque - Expression for

rotor torque, starting torque, Full load torque, pull out torque, Torque - slip curve, Factors affecting rotor torque and slip.

Losses and power flow in three phase Induction motor- rotor output and motor torque, synchronous watt. Equivalent circuit model - Electrical equivalent of mechanical load, relation between rotor input and rotor cu-loss, Phasor diagram of three phase Induction motor. Comparison of three phases IM and Transformer.

Main dimensions of three phase IM, Separation of D and L, Length of air gap

UNIT-IV		**9 hours**

Tests on Three Phases IM- Stator resistance test, no load test, voltage ratio test, Blocked rotor test, Heat run test. Measurement of slip – Stroboscopic method, Circle diagram – construction and predetermination of performance (efficiency, slip , torque, power factor, current, at any given load and at maximum conditions), factors affecting performance of three phase Induction motor, cogging and crawling. High torque cage motors – Deep bar cage rotor motor, double cage rotor motor. Applications of three phase Induction motor, Induction Generator.

UNIT-V		**5 hours**

Fractional HP AC motors

Introduction to single phase Induction motors, construction – stator, rotor and windings, Working principle, Double revolving field theory, Equivalent circuit of single phase Induction motor, Starting methods - Split – phase, shaded pole type, applications, Universal motor, Repulsion motor.

Laboratory Experiments :

OC and SC tests on single phase transformer, Direct load test on single phase transformer, Parallel operation of two dissimilar single phase transformers, Sumpner's test, Three phase connection of three single phase transformers, Scott connection for balanced and unbalanced two phase upf loads, Load test on single phase induction motor, No Load and blocked rotor test on three phase induction motor, Speed control of three phase induction motor – Rotor resistance control

Text books:

1	**Theory and performance of Electrical Machines**- J.B. Gupta, S.K. Kataria and sons-

	New Delhi,2013
2	**Electrical Machinery -** Dr. P.S. Bhimbra, ,Khanna Publications, 7th Edition, 2007.
Reference books:	
1	**Electric Machines** – Ashfaq Husain, DhanpatRai and Co. , Second Edition,2014
2	**Performance and Design of Alternating Current Machines**- M. G. Say, John Wiley and Sons Publications, 3 rd Edition,2002
3	**A Course in Electrical machine design -** A. K. Sawhney, DhanpatRai and Sons,6th edition,2006
E Books:	
1	http://nptel.ac.in/courses/108105017/
2	http://nptel.ac.in/courses/108106072/
Course Outcomes: At the end of the course, the student will have the ability to	
CO1: Sketch and describe the constructional details and operating principles of Transformers and Induction Motors.	
CO2: Analyze the performance of Transformers and Induction Motors usingphasor diagrams and circuit model of machines	
CO3: Select appropriate AC machine for aspecified application and justify the selection.	

Course Title	ELECTRICAL ENERGY SYSTEMS				
Course Code	16EE5DCENS	Credits	3	L-T-P-S	3-0-0-0
CIE	50 Marks(100% weightage)	SEE	100 Marks(50% weightage)		

Prerequisites:

Basic Electrical Engineering

Course Description:

This course focuses on the current energy scenario in the country and the role of conventional & non –conventional energy sources.The operation of different conventional power plants, working of solar photovoltaic and wind energy systems and their importance, types of cost structure and hence tariff for power generation are dealt with. The necessity of power factor improvement to reduce load, plant capacity and cost of powerarecovered.Typesof substation and bus bar arrangement schemesforpower transmission and their location, environmental impact and viability issues are also addressed.

UNIT-1		5 hours

Sources of Electrical Power

Conventional and nonconventional sources-Introduction, world energy futures, Energy sources and their availability,Energy scenario in India,Combined heat and power distributed generation.

UNIT-2		12 hours

Detailed study of conventional sources

Selection of site, classification, general arrangement and operation of hydro,thermal and nuclear power stations.

UNIT-3		7 hours

Non-conventional sources

Solar electric Power Generation: Solar photovoltaics, solar cell principles, conversion efficiency and power output, basic photovoltaic system for power generation, solar photovoltaic arrays and

connecting arrangements. Wind: Basic principle of wind energy conversion systems and components, nature of wind, wind survey in India. Introduction to Bio mass conversion. Introduction to micro hydel systems.

UNIT-4		**8 hours**

Economic aspects

Introduction, terms commonly used in system operation. Diversity factor, load factor, plant capacity factor, plant use factor, load duration curve. Power factor improvement and tariffs.Energy-load curve.

UNIT-5		**7 hours**

Substations

Introduction, types, bus bar arrangement schemes, location,substation equipment. Reactors and capacitors current limiting reactors.

Energy and Environment- Environmental impact of power plants and social issues of concern - Sulfur oxides, nitrogen oxides, ozone, acid rain, ashes, carbon dioxide, radioactive releases. Introduction to smart grid: Major difference between conventional and smart grid. Energy efficiency of various conventional and non – conventional conversion systems.

Text books:

1	**Power System Engineering** -A. Chakrabarti, M. L. Soni, and P.V. Gupta, U.S. Bhatnagar, DhanpatRai and Co., New Delhi,2008
2	**Non-conventional Energy Sources-** G D Rai, Khanna Publishers,2011

Reference books:

1	**Electrical Engineering: An introduction- El** – Sharkawi, CRC Press,3rd edition,2012
2	**Electric Power Generation, Transmission and Distribution-**Dr. S. N. Singh, P.H.I., New Delhi,2nd edition,2011
3	**Electrical Power Generation -** Prof.B.N.Yoganarasimhan,2005

E Resources:

1.	https://www.google.co.in/url?sa=t&rct=j&q=&esrc=s&source=web&cd=4&cad=rja&uact=8&ved=0ahUKEwjf2IXfwfTMAhUGr48KHQY4D2UQFggvMAM&url=http%3A%2F%2Fwww.theiet.org%2Ffactfiles%2Fenergy%2Fsmart-grids-page.cfm%3Ftype%3Dpdf&usg=AFQjCNE7w-9jRar-0rDoUDIxfs07KbWWvw&bvm=bv.122676328,d.c2I

2.	https://beeindia.gov.in/sites/default/files/1Ch1.pdf

Course outcomes At the end of the course,thestudent will have the ability to
CO1:Interpret the data available on the nation's energy scenario, distinguish the contributions of conventional and non-conventional sources and co-generation units in power plants.
CO2:Describe the operation of different kinds of conventional and non-conventional energy resources and assess their environmental impact and viability in different social situations.
CO3:Evaluate various factors that contribute to the economic operation and efficient management of Energy systems.
CO4:Compare, choose amongst the various types of substations for a specified location and justify.

Course Title	DIGITAL SIGNAL PROCESSING (EE only)				
Course Code	16EE5DCDSP	Credits	06	L-T-P-S	3-0-1-2
CIE	50 Marks(100% weightage)	SEE	100 Marks(50% weightage)		

Prerequisites:

Signals and Systems, Electric Circuit Analysis, Control systems

Course Description:

The course covers topics on various analysis of discrete-time signals in the frequency domain, design and realization of finite impulse response and infinite impulse response digital filters, basics of multi-rate signal processing, application of processing techniques to audio,ecg, speech and electrical signals.The laboratory experiments are closely coordinated with each unit.

UNIT-I		7 hours

Introduction to DSP, Signal Sampling and reconstruction:Practical considerations, Discrete FourierTransform(DFT)Formulae,Useful properties of DFT:Linearity,Circularshift, Multiplication by a complex exponential sequence, properties of even and odd parts of x[n]. Multiplication,Parseval'srelation, Circular convolution in the time domain, use of tabular arrays &circular arrays.

UNIT-II		8hours

Use of DFT in Linear filtering, Linear convolution of two finite duration sequences, overlap add and save methods,Relation between DFT and other transforms, Radix 2 Fast Fourier Transform(FFT) algorithm for DFT computation, decimation in time algorithm, Decimation in Frequency algorithms.Computational efficiency, Radix 2 FFT algorithm for computation of Inverse Discrete Fourier transform (IDFT),Signal Spectrum: Computation of Amplitude,Phase and Power Spectrum.

UNIT-III		10hours

Basic types of filtering ,Realization of Digital Filters: Direct Form-I,Direct Form-II, Cascade and Parallel representation, realization of structures of Infinite Impulse Response (IIR) systems, Introduction to IIR filters, Pole zero placement method for simple IIR Filters,Second order band pass and band stop,First order low pass, high pass filter designs, Transformation Design Method: Analog Filters using low pass prototype transformation,Frequency Warping, Design procedure.

Digital Butterworth Filter design.		
UNIT-IV		**8 hours**
Realization of Finite Impulse Response (FIR)systems Transversal form, Linear Phase Form, Introduction To FIR filters, Design of FIR by Window method: Rectangular, Triangular, Hanning, Frequency sampling design method.		
UNIT-V		**6 hours**
Multirate signal processing basics, application of filters in heart rate detection using electro cardiography, speech noise reduction, processing for various measurements in power systems.		
Lab Experiments: Study of various types of discrete time signals and analysis of the sampling effect in their processing, Discrete Fourier Transform (DFT) and Fast Fourier Transform (FFT) algorithms for computation of DFT, Frequency domain analysis: Verification of DFT properties, determination of power and phase spectrum of signals, Implementation of various operations such as circular convolution, block convolution,multi-rate signal processing on discrete time signals. Design and implementation of digital filters.		

Text books:

1	**Digital signal Processing- Fundamentals and Applications-** Li Tan, Published by Reed Elsevier,India Private Limited, New Delhi-110065,2008.
2	**Digital Signal Processing – Principles, Algorithms & Applications** - John G. Proakis&DimitrisG.Manolakis, Pearson education / Prentice Hall,Fourthedition, 2007.

Reference books:

1	**Fundamentals of Digital Signal Processing-** Lonnie C. Ludeman,Jon Wiley & Sons,1987.
2	**Discrete Time Signal Processing-** Pearson Education, Alan V.Oppenheim, Ronald W. Schafer &Hohn. R.Back2nd edition, 2005.
3	**Power Systems Signal Processing for Smart Grids-** Paulo Fernando Ribeiro, Carlos Augusto Duque, Paulo MarcioRibeiro, Augusto Santiago Cerqueira,Wiley, December 2013.

E Books:	
1	The Scientist and Engineer's Guide to Digital Signal Processing - Steven W. Smith, Ph.D.
2	Digital Signal Processing Principles, Algorithms, and Applications - John G. ProakisNortheastern University Dimitris G. Manolakis, Third Edition
MOOCS:	
1	https://www.mooc-list.com/course/applied-digital-signal-processing-dit?static=true
2	Sign up at http://www.coursera.org/course/dsp

Course Outcomes:

At the end of the course ,the student will have the ability to

CO1: Apply Discrete Fourier transforms for different types of signals, interpret the information obtained and reconstruct.

CO2: Analyze discrete parameter signals and their transforms for their behaviour.

CO3: Design and demonstrate application of linear system analysis to engineering problems.

Course Title	MEASUREMENTS AND INSTRUMENTATION				
Course Code	16EE5DCMNI	Credits	3	L-T-P-S	3-0-0-0
CIE	50 Marks(100% weightage)	SEE	100 Marks(50% weightage)		

Prerequisites:

Basic Electrical Engineering

Course Description:

This course covers description of different types of bridges used for measurement of resistance, inductance & capacitance, instruments used for the measurement of power, power factor, energy & frequency, instrument transformers used in ac measurement, construction,operation& applications of Crompton's DC potentiometer, operation of digital voltmeters &types of waveform generators, selection of transducers based on the application.

UNIT-I		8 hours

Measurement of Resistance -Wheatstone's bridge, sensitivity, limitations, Kelvin's double bridge, Fall of potential method. Measurement of inductance &capacitance , Sources& detectors, Maxwell's inductance bridge, Maxwell LC bridge, Anderson's bridge, Desauty's bridge, Schering bridge, Errors in AC bridges & methods of minimization.

UNIT-II		8hours

Measurement of Power, Energy, Power factor & Frequency meter - Review of construction & operation of Dynamo meter wattmeter & Induction type energy meter, errors in wattmeter,LPF wattmeter, errors & adjustments in single phase energy meter, construction & operation of single phase dynamometer type power factor meter ,Weston frequency meter.

UNIT-III		7 hours

Extension of instrument ranges - Construction & theory of instrument transformers, expression for ratio error & phase angle error in CT, causes of errors & means to reduce errors in CT.
DC Potentiometer: Construction & operation of Crompton's type dc potentiometer,Applications of dc potentiometer.

UNIT-IV		8 hours
Electronic instruments - Block diagram & working of Ramp type DVM, Integrating type DVM,Servo balancing type DVM, AF Sine & square wave generator, Function generator, Field strength meter.		
UNIT-V		**8 hours**
Transducers - Classification of transducers, selection factors, operation of Potentiometric Transducer, LVDT, Strain gauges, Temperature transducers, Piezoelectric transducer.		

Text books:	
1	**Electronic instrumentation**-H.S.Kalsi, TMH Education Private limited, New –Delhi. 3rd edition,2012
2	**A Course in Electrical & Electronic measurements &instrumentation**-A.K.Sawhney,DhanpatRai&Co(Pvt) limited, New –Delhi.Nineteenth revised edition 2011.
Reference books:	
1	**Modern Electronic instrumentation & measurement Techniques**-William.D. Cooper&A.D.Helfrick, Pearson Education. First edition 2015,
2	**Electronic instrumentation & measurements**-David.A.Bell**,** Oxford University. 3rd edition 2013
E Books:	
1	http://www.free-engineering-books.com/2013/05/electronic-instrumentation-and.html.

Course outcomes At the end of the course, the student will have the ability to
CO1: Identify& select suitable bridges for the measurement of electrical circuit parameters.
CO2: Distinguish the concept behind the operation of analog & digital instruments for the measurement of electrical circuit parameters.
CO3: Select and justify the choice of asuitabletransducerfor an application.

Course Title	Measurements and control systems Lab				
Course Code	16EE5DCMCL	Credits	01	L-T-P-S	0-0-1-0
CIE	50 Marks (100%weightage)	SEE	50 Marks(50% weightage)		

List of Experiments	
1.	To Measure (a) Medium resistance by Wheatstone bridge (b) Low resistance by Kelvin's Double Bridge (c) High Resistance by Megger
2.	Measurement of Inductance and Capacitance by (a) A-V-W Method (b) Three Voltmeter Method.
3.	Measurement of Inductance and Capacitance using A.C Bridges.
4.	To measure the variation in speed of a dc servomotor in terms of voltage and frequency using an optical sensor and a frequency to voltage converter.
5	Using Matlab/Simulink create transfer functions, state space models, change from state space to transfer function models and vice versa, Build systems with unity and non unity feedback and obtain their step response
6.	Computing poles and zeros of a system described by higher order polynomialsand vice versa,visualize the effect of changes in poles and zeros of a transfer function on the system response, mesh plots.Comparison of step and impulse responses of systems.
7.	Create and analyze root locus plots. Design by means of root locus plots.
8.	Simulation of PID control using Simulink and experimental verification on a second order system.
9.	Design a passive RC lag compensating network for the given specifications,viz, the maximum phase lag and the frequency at which it occurs and to obtain its frequency response.Verify experimentally the frequency response of the above lag compensating network.
10.	Design a passive RC leadcompensating network for the given specifications,viz,the maximum phase lead and the frequency at which it occurs and to obtain its frequency response.Verify experimentally the frequency response of the above leadcompensating network.

Course Title	EMBEDDED SYSTEM DESIGN (Department Elective I)				
Course Code	16EE5DE1ES	Credits	3	L-T-P-S	3-0-0-0
CIE	50 Marks(100% weightage)	SEE	100 Marks(50% weightage)		

Prerequisites:

Microcontrollers

Course Description:

The course gives an insight to the fundamental concepts related to hardware and software designing of embedded systems inculcating the salient topics such as processor and memory organisation along with case studies, real time operating systems (RTOS), an overview of the various scheduling algorithms, peripheral interfacing . The latter part comprises introduction, architecture and basic assembly level programming of PIC microcontroller, Timers, Interrupts handling, ADC and DAC using PWM.

UNIT-I		7 hours

Concept Of Embedded System Design - Definition, internal block diagram and components, classification, skills required,Embedded software in a system, design process in embedded systems, design metrics, challenges in Embedded system design. Examples of embedded systems: Automatic chocolate vending machine and smart card.

UNIT-II		7hours

Processor and Memory Organization - Processor and memory organization, Princeton and Harvard architecture, Instruction –Level parallelism: pipelined and superscalar units, Memory types, memory maps and addresses, processor selection and Memory selection (including two case studies for each)

UNIT-III		9hours

Real Time Operating System(RTOS) And Scheduling Algorithms

Introduction to RTOS, fundamental requirements of RTOS, real time kernel types, schedulers, variousscheduling algorithms with examples, latency (interrupt latency, scheduling latency and context switching latency), tasks, state transition diagram, task control block. Inter-task communication and synchronization of tasks.

UNIT-IV		7 hours

Devices And Peripheral Interfacing - I/O types and examples, serial communication devices, parallel device ports, parallel port interfacing with switches, keypad,stepper motor, Timer and counting devices, Watch dog timer.

UNIT-V		9hours
Microchip PIC Microcontroller - Introduction to PIC Microcontroller - 16Fxx series, CPU Architecture, Addressing modes, Instruction set, Basic assembly level programming, Timers, Interrupts, ADC,DAC using PWM.		
Text books:		
1	**Embedded System Architecture: Programming & Design** – Rajkamal,TMH Edition, 2007.	
2	**Design with PIC Microcontrollers** - John B. Peatman, Prentice Hall, 1997.	
Reference books:		
1	**Embedded Microcomputer System: Real time interfacing** - J. W. Valvano,Cengage-Engineering, 1st Edition, 2000.	
2	**Real Time Systems** -Jane W.S. Liu,Prentice Hall, 2000.	
E Resourses:		
1	http://nptel.ac.in/courses/Webcourse-contents/IIT%20Kharagpur/Embedded%20systems/New_index1.html	
2	http://nptel.ac.in/courses/108102045/	

Course outcomes At the end of the course ,thestudent will have the ability to
CO1: Design an embedded system as solution to real time problems applying the knowledge of processor,memory and peripheral interfacing techniques.
CO2: Analyzeschedulers, scheduling algorithms, latencies, task, and synchronization of tasks for real time embedded systems.
CO3: Realize a RISC Microcontroller and apply the knowledge of programming to develop small scale embedded applications.

Course Title	**Design and Implementation of Digital Systems using HDL (Department Elective I)**				
Course Code	**16EE5DE1HD**	**Credits**	**03**	**L-T-P-S**	**2-0-1-0**
CIE	**50 Marks(100% weightage)**	**SEE**	**100 Marks(50% weightage)**		

Prerequisites:

Digital Electronics

Course Description:

This course deals with the study of programming language for the design and implementation of the Digital Electronic systems. Two major styles, namely, VHDL and Verilog are dealt with.

UNIT-I		**4 hours**

Introduction: Why HDL, Structure of HDL Module, Operators, Data types, Brief comparison of VHDL and Verilog.

UNIT-II		**7 hours**

Data – Flow Descriptions: Highlights of Data – Flow Description, Structure of Data – Flow Description, Data Type – Vectors. Dataflow descriptions (Both VHDL & Verilog) of Half adder, 2*1 MUX, 2*2 unsigned array multiplier, D-Latch, 2-Bit magnitude comparator, 3 – Bit ripple carry adder & carry look ahead adder.

Behavioral Descriptions: Behavioral Description highlights, Structure of HDL behavioral Description, VHDL variable – assignment statement, sequential statements. Behavioral descriptions (VHDL & Verilog) of 2*1 MUX, D-Latch, Edge triggered JK Flip flop, 3-Bit Binary counter, Booth Algorithm.

UNIT-III		**6 hours**

Structural Descriptions: Highlights of structural Description, Organization of the structural Description, Binding, Generate, Generic and parameter statements. Structural Descriptions (VHDL & Verilog) of Half Adder, 2*1 MUX, 2*4 Decoder, Full adder, SR-Latch, Master Slave D – Flip flop & JK – Flip flop. Application of structural description to implement SRAM Cell. N

– Bit Magnitude comparator & N-Bit Asynchronous down counter using Generate statements.

UNIT-IV		**5 hours**

Procedures, Tasks and Functions: Highlights, Procedures and tasks, Functions.HDL Description of Full adder, N-Bit Ripple Carry adder, data type conversions using Procedures and tasks, Functions to find Greater of two numbers.

UNIT-V		**4 hours**

Synthesis Basics: Highlights of Synthesis, Synthesis information from Entity and Module, Mapping Process and Always in the Hardware domain

Applications: Interfacing programs –Seven Segment Display, Waveform generation: ramp, square, triangular.

Lab Experiments:

VHDL & Verilog programs to realize the following using Xilinx ISE Design Suite software: Basic gates, Half & Full adder, Half & Full subtractor, Binary to Gray code conversion.,4:1 MUX, 2:4 Decoder, 2*2 Combinational array multiplier, Priority Encoder, D-Flip flop, JK – Flip flop,Booth Algorithm, 3 – Bit Binary up counter & down counter ,Interfacing programs.

Text books:

1	**HDL Programming - VHDL and Verilog**–NazeihMBotros, Dreamtech Press, 2007 Edition, reprint 2013.

Reference books:

1	**Verilog HDL – A Guide to Digital Design and Synthesis**–SamirPalnitkar, Pearson Education, Second Edition,2003
2	**VHDL – Programming by example** - Douglas Perry, TMH, Fourth Edition,2002
3	**Circuit Design with VHDL** - Volnei A Pedroni, PHI, Second Edition,2010

Course outcomes

At the end of the course,the student will have the ability to

CO1: Apply digital electronics engineering fundamentals to identify, formulate and analyse various digital systems.

CO2: Design hardware/software systems using appropriate modelling techniques within certain constraints.
CO3: Test and interpret the data through experiments using modern IT tools.

Course Title	**C++ for Engineering Applications (Department elective I)**				
Course Code	**16EE5DE1CP**	**Credits**	**3**	**L-T-P-S**	**2-0-1-0**
CIE	**50 Marks(100% weightage)**	**SEE**	**100 Marks(50% weightage)**		

Prerequisites:

Basic principles of programming concepts

Course Description:

The course deals with applying the concepts of OOPs to C++ as an example language. The course gives introduction to basic concepts of C++ programming (including data types, operators, selections, loops, functions and simple I/O syntax), Advanced topics such as classes, objects, data abstraction, data encapsulation, overloading, inheritance, polymorphism and reusability, templates, exceptions and file handling concepts are also dealt with. Application of programming in C++ for realization of digital circuits, steady state and transient analysis of electrical networks are covered.

UNIT-I		**5 hours**

Principles Of Object Oriented Programming - Basic Concepts of OOPS, OOP Languages, Pre-processors directives and header files, Beginning with C++: Definition , structure of C++ program, compiling and linking, Tokens, expressions and control Structures: Tokens, keywords, identifiers and constants, datatypes,symbolic constants, variables, operators,manipulators,control and statement loops.

UNIT-II		**5 hours**

Functions In C++: Introduction, Main function, function prototype,call by reference,return by reference, inline functions, function overloading,friend and virtual functions.

Classes and objects: Specifying a class,memberfunctions,arrays within a class,static data members and member functions, arrays of objects, returning objects

UNIT-III		**5hours**

Constructors And Destructors - Constructors, parameterized constructors, multiple constructors in a class, copy constructor, dynamic constructors and destructors.Operator overloading and type conversions: Overloading unary and binary operators, overloading using friends, rules of overloading.

UNIT-IV		**5 hours**

Inheritance - Introduction, defining derived classes, Types of inheritance: Single, multilevel, multiple, hierarchical, hybrid.Pointers,virtual and polymorphism: Pointers,pointers to objects,this pointer, pointers to derived classes,virtual functions.

Managing console I/O operations:C++ streams,C++ stream classes, unformatted and formatted I/O operations.

UNIT-V		**6 hours**

Templates And File Handling
Templates: Class templates, Function templates
Exception handling: Basics, Throwing and catching mechanisms, rethrowing an exception.
File operations: Introduction,classes for file stream operations, Opening and closing afile:opening files using constructors, detecting end-of-file.

C++ for Electrical and Electronics engineering concepts –
C++ programming for digital circuits, AC circuits, steady state and transient analysis of electrical networks.

Lab Experiments:
CPP programs based on operators,manipulators,control and statement loops, CPP programs based on functions, function overloading, friend and virtual functions, CPP programs based on classes, arrays and objects, CPP programs on constructors, destructors and operator overloading, CPP programs on Pointers , CPP programs on templates and file operations, CPP programs for digital circuits and AC circuits, CPP programs for steady state and transient analysis of electrical networks.

Text books:

1	**Object oriented Programming with C++** -E Balaguruswamy ,TMH publications 6th edition,2015

2	**Let us C++** -Yashvanth P Kanetkar ,BPB Publications,2nd edition,2015
Reference books:	
1	**Object oriented Programming with turbo C++** - Robert Lafore ,GALGOTIA Publications,2007
2	**Programming with C++** -Schaum'sseries ,TMH Publications,2nd edition ,2000
E Books:	
1	http://ocw.mit.edu/courses/electrical-engineering-and-computer-science/6-00-introduction-to-computer-science-and-programming-fall-2008/video-lectures/lecture-14/ [Video lectures and transcripts on Object oriented programming by MIT]
2	Programming in C++ for Engineering and Science, Larry Nyhoff, CRC press, Taylor & Francis Group.

Course outcomes At the end of the course,the student will have the ability to
CO1: Apply the basic concepts ofC++ programming in developing the code for various operations
CO2: Write C++ programs using salient features of OOPssuch as Classes, Objects, Data Abstraction, Data encapsulation, Overloading, Inheritance,Polymorphism and file handling concepts for various applications.
CO3: Develop C++ programs for Electrical and Electronics Engineering applications.

Course Title	**ELECTRICAL INSTALLATION, TESTING, COMMISSIONING AND MAINTENANCE (Department Elective I)**				
Course Code	**16EE5DE1TC**	**Credits**	**3**	**L-T-P-S**	**3-0-0-0**
CIE	**50 Marks(100% weightage)**	**SEE**	**100 Marks(50% weightage)**		

Prerequisites:

Electrical Machines, Basic Electrical Engineering

Course Description:

The course covers topics on general principles of cost estimationofelectrical installations, electrical design for residential and commercial buildings, testing of transformers and induction motor.

UNIT-I		**8hours**

General principles of estimation - Introduction to estimation & costing, Electrical schedule. Catalogues, Market survey and source selection. Recording of estimates, determination of required quantity of material, Labor conditions. Determination of cost material and labor contingencies. Overhead charges, profit, purchase system, purchase enquiry and selection of appropriate purchase mode. Comparative statement, purchase orders, payment of bills. Tender form, general idea about IE rule, Indian Electricity Act and major applicable I.E rules.

UNIT-II		**8 hours**

Residential and commercial building electrification - General rules guidelines for wiring of residential installation and positioning of equipment's**,** principles of circuit design in lighting and power circuits, procedures for designing the circuits and deciding the number of circuits, method of drawing single line diagram. Selection of type of wiring and rating of wires and cables. Load calculations and selection of size of conductor, Selection of rating of main switch. Distribution board, protective switchgear ELCB and MCB and wiring accessories, Earthing of residential Installation, Sequence to be followed for preparing estimate, Preparation of detailed estimates and costing of residential installation.

Concept of commercial installation, Differentiate between electrification of residential and commercial installation.

UNIT-III		7 hours

Electrical installation for power circuits - Introduction, important considerations regarding motor installation wiring, determination of input power, determination of input current to motors, determination of rating of cables.Determination of rating of fuse, determination of size of conduit, distribution board main switch and starter.

UNIT-IV		8hours

Testing of transformers - Specifications: Power and distribution transformers as per BIS standards.Installation: Location, site, selection, foundation details (like bolts size, their number, etc), code of practice for terminal plates, polarity & phase sequence, oil tanks, drying of windings and general inspection.

Specific Tests: Determination of performance curves like efficiency, regulation etc, and determination of mechanical stress under normal &abnormal conditions.

UNIT-V		8 hours

Induction Motors - Specifications for different types of motors, Duty, I.P. protection.

Installation: Location of the motors (including the foundation details) & its control apparatus, shaft & alignment for various coupling, fitting of pulleys & coupling, drying of windings.
Electrical Tests: Insulation test, earth resistance, high voltage test, starting up, failure to speed up to take the load, type of test, routine test, factory test and site test (in accordance with ISI code)

Text books:

1	**Electrical Installation Estimating & Costing -** J.B.Gupta, S.K. Katria& Sons New Delhi, VIII Edition,2013
2	**Electrical estimating and energy management-** K.RGangadharaRao, Sapna. Publications,2006
3	**Testing & Commissioning of Electrical Equipment -**S. Rao,Khanna Publishers,2004

Reference books:

1	**Electrical Design Estimating and Costing -**K.B.Raina, S.K.Bhattacharya, New Age International , 2005
2	**Electrical Wiring Estimating and Costing -**S.L.Uppal, G.C Garg, Khanna Publishers, Delhi,2008

3	A Handbook on Operation and Maintenance of Transformers- H. N. S. Gowda, Published by H. N. S. Gowda,2006

Course Outcomes:
At the end of the course ,the student will have the ability to

CO1: Apply Indian Electricity Rules and Regulations for design of electrical systems.

CO2: Design electrical systems as per the requirements for residential and commercial purposes

CO3: Test and install electrical apparatus and HVAC systems for commercial and industrial applications

CO4: List the conditions for Install of electrical equipments

VI Semester Syllabus

Course Title	POWER SYSTEMS I				
Course Code	16EE6DCPS1	Credits	4	L-T-P-S	3-1-0-0
CIE	50 Marks(100% weightage)	SEE	100 Marks(50% weightage)		

Prerequisites:

Transmission and Distribution, Electrical Energy Systems

Course Description:

This course covers various techniques for analysis of different types of faults occurring in the Power System. Methods of evaluating Power System Stability are also discussed.

UNIT-I		7 hours

Representation of Power system Components: Circuit models of Transmission line, Synchronous machines, Transformer and load. Single line diagram, impedance and reactance diagram. Per unit system, per unit impedance and reactance diagrams

UNIT-II		8 hours

Formation of Z-bus using building algorithm(Without Mutuals), Symmetrical 3 - Phase Faults: Transients on a transmission line, Short-Circuit currents and the reactance of synchronous machines on load and on no load, fault analysis using Z-bus matrix

UNIT-III		8 hours

Symmetrical components - Resolution of unbalanced phasors into their symmetrical components, Analysis of unbalanced load against balanced Three-phase supply, Analysis of balanced and unbalanced loads against unbalanced 3 phase supply, Phase shift of symmetrical components in star-delta transformer bank, Power in terms of symmetrical components. Sequence impedances and networks of power system elements (alternator, transformer and transmission line) Sequence networks of power systems

UNIT-IV		8 hours

Unsymmetrical faults - L-G, L-L, L-L-G faults on an unbalanced alternator with and without fault impedance. Unsymmetrical faults on a power system with and without fault impedance. Open conductor faults in power system

UNIT-V		8 hours

Stability Analysis- Importance of stability analysis in power system planning and operation, classification of power system stability, Rotor dynamics and the swing equation. Equal area

criterion for transient stability evaluation and its applications.	
Text books:	
1	**Elements of Power System Analysis** - WD Stevenson, McGraw Hill Publications,2nd Edition,1994
2	**Modern Power System Analysis I** – JNagrath and DP Kothari, Tata McGraw Hill Publications, 3rd Edition,2003
Reference books:	
1	**Computer aided Power System Analysis** - GLKusic, CRC Press, 2nd edition,2008
2	**Power System Analysis** - Hadi Sadat, Tata McGraw Hill Publications, 3rd edition,2002
E-learning:	
1	NPTEL Course titled: Computer Aided Power System Analysis. Link: http://nptel.ac.in/courses/108107028/
Course outcomes At the end of the course ,the student will have the ability to	
CO1 : Model and analyze power systems using complex mathematical transformations under short circuit and unbalanced conditions	
CO2: Analyze different unsymmetrical faults on unloaded alternator and on complex power systems using symmetrical component transformations	
CO3: Apply mathematical techniques to evaluate system stability.	

.

Course Title	ELECTRICAL MACHINES II				
Course Code	16EE6DCMC2	Credits	6	L-T-P-S	3-0-1-2
CIE	50 Marks(100% weightage)	SEE	100 Marks(50% weightage)		

Prerequisites:

Engineering Physics, Basic Electrical Engineering

Course Description:

The course covers construction, operation, testing and control of DC machines and synchronous machines. Performance analysis of DC and synchronous machines both in motoring and generating modes are discussed.

UNIT-I		7 hours

DC machine - Construction, DC armature windings- Terminology and Types, MMF distribution, slot harmonics, Circuit model of a DC machine- generating and motoring modes, Characteristics of generator and motor, Armature Reaction, Commutation. Output equation of a DC machine, specific loadings, Separation of D and L.

UNIT-II		8 hours

Testing and Speed control of DC machines

Power flow in DC machine - Motoring and Generating modes. Testing of DC machines - Direct and indirect methods, predetermination of losses and efficiency by Swinburne's, Hopkinson's and Retardation tests, applications of DC machine. Speed control of DC shunt and DC series motors - Voltage, flux, and armature rheostat control.

UNIT-III		7 hours

Synchronous Machine :

Synchronous Generators: Operating Principle, constructional features - revolving field vs revolving armature, stator, salient pole type and non-salient pole type rotor, winding factors , EMF equation, waveshape of EMF induced, armature reaction and its nature in synchronous generators,

Synchronous Motor: Principle of operation, methods of starting, nature of armature reaction in synchronous motors, power flow and efficiency of synchronous motor, Hunting and Damping,

applications of synchronous machines.

Magnetic circuit of three phase synchronous machines, Determination of field ATs of salient and non salient pole machines.

UNIT-IV		9 hours

Voltage regulation and methods of synchronization :

Synchronous impedance, OC and SC tests, Voltage regulation, determination of voltage regulation by EMF, MMF and ZPF methods. Slip test on salient pole alternator, voltage regulation of salient pole alternator using X_d and X_q. Need and conditions for parallel operation of alternators, Methods of synchronizing a three phase alternator to bus bars (dark lamp method, bright lamp method, synchronizing transformer, Synchronoscope). Load sharing between two alternators in parallel.

UNIT-V		8 hours

Operating characteristics of synchronous machine :

Synchronous machine model, operation in generating and motoring modes, circuit model. Synchronizing current and torque, Expression for power exchanged between busbars and the synchronous machine with and without armature resistance, conditions for maximum power, Power angle characteristics, Effect of change in excitation, effect of change in prime mover input and effect of change in load for both generating and motoring modes.

Lab Experiments:

Swinburne`s test, Hopkinson`s test, Retardation test, Speed control of DC motor by armature rheostatic control , flux control and Ward Leonard method, Voltage regulation of a non – salient pole alternator by EMF, MMF and ZPF method, Slip test, Synchronization of alternators in parallel with bus - bars, V curves of synchronous motor.

Text books:

1	**Theory and Performance of Electrical Machines**- J.B. Gupta, S.K. Kataria and Sons- New Delhi,2013 [Unit I,II,III,IV]
2	**Electrical Machines - I -** J. Nagrath, D.P. Kothari, Tata Mcgraw-Hill Publishing Company Limited, New Delhi, third Edition,2004 [Unit V]

Reference books:	
1	**Theory of Alternating Current Machinery-** Alexander S. Langsdorf, Tata Mcgraw-HillPublishing Company Limited, New Delhi, Second Edition,2001 [Methods of synchronization]
2	**Electrical Machines** – AbhijitChakrabarti , SudiptaDebnath, Mcgraw Hill Education (India) Private Limited, Newdelhi,1st edition 2015
3	**A Course in Electrical machine design -** A. K. Sawhney, DhanpatRai and Sons,6th edition,2006
E Books:	
1	http://nptel.ac.in/courses/108105017/
2	http://nptel.ac.in/courses/108106072/
Course Outcomes: At the end of the course ,the student will have the ability to	
CO1: Describe the constructional details, principle of operation, characteristics and speed control of DC machines and select DC motors for specific application	
CO2: Evaluate the performanceof DC machine by testing them in both generating and motoring modes	
CO3: Describe the constructional details, principle of operation of synchronous machine in generating and motoring modes and their selection for specific application	
CO4: Develop synchronous machine model and evaluate the performance of synchronous machine during parallel operation	

Course Title	**Power Electronics – I**				
Course Code	**16EE6DCPE1**	**Credits**	**6**	**L-T-P-S**	**3-0-1-2**
CIE	**50 Marks(100% weightage)**	**SEE**	**100 Marks(50% weightage)**		

Prerequisites:
Analog microelectronics, Linear Circuit Analysis

Course Description :
The course deals with the principle of operation and characteristics of various switching devices,principle and analysis of operation of power conversion systems such as controlled rectifier circuits, inverters and DC choppers.

UNIT-1		**8 hours**

Introduction - Applications of Power Electronics, introduction to switching devices: Ideal characteristics, characteristics of practical devices, Power Semiconductor Devices, Control Characteristics of Power Devices, types of Power Electronic Circuits, peripheral Effects.Power Transistors: Power BJTs: Steady state characteristics (Qualitative analysis only). Power MOSFETs: device operation, switching characteristics, IGBTs: device operation, output and transfer characteristics, di/dt and dv/dtlimitations.Gate drive circuits:MOSFET/IGBT gate drive, Isolation of gate and base drives.

UNIT-2		**6 hours**

DC-DC Converters - Introduction, principle of step-down operation and it's analysis with RL load (only CCM mode of operation), and principle of step-up chopper with R load, performance parameters, Chopper/Converter classification (Quadrant classification).

UNIT-3		**7 hours**

Thyristors - Introduction, thyristor characteristics, Two transistor model, turn on and turn off, di/dt and dv/dt protection. Steady state characteristics of TRIAC, GTO, MCT and IGCT. Thyristorfiring circuits, Commutation techniques: Introduction, Natural commutation, Forced commutation: selfcommutation (Qualitative analysis only)

UNIT-4		**8 hours**

Controlled rectifiers - Introduction, principle of phase controlled converter operation, Single phase fully controlled converters, Single phase semi-converters, Three phase fully controlled

converters (RL load, Continuous current conduction operation only)		
UNIT-5		**10 hours**
Inverters- Introduction, principle of operation, performance parameters, Single phase bridge inverters, Three phase inverters, voltage control of single phase inverters- single pulse width, multiple pulse width and sinusoidal pulse width modulation, Current source inverters.		
Lab Experiments: 555 Timer as a triggering source, Static characteristics of SCR, MOSFET and IGBT, Simulation and practical realization of a step up and step down DC-DC converter with R and RL load, Simulation and practical realization of a single phase fully controlled converter and semi converter,single phase bridge inverter with R and RL load.		
Text books:		
1	**Power Electronics – Circuits, Devices and Applications** - Muhammad H Rashid, Pearson edition pvt ltd , Third Edition,2004	
Reference books:		
1	**Power Electronics – Converters, Applications and Design** - Ned Mohan, Tore Undeland and William P Robbins, John Wiley &sons , 3rd Edition,2002	
2	**Power Electronics – Principles and Applications** - Joseph Vithayathil, TATA McGraw-hill Edition,2010	
3	**Power Electronics** - M.D.Singh, K B Khanchandani, TMH ,Second edition,2008	
E-Resources:		
1	NPTEL Lecture on “Power Electronics” http://nptel.ac.in/courses/108105066/	
2	NPTEL Lecture on “Power Electronics” http://nptel.ac.in/courses/108101038/#	

Course outcomes At the end of the course ,the student will have the ability to
CO1: Explain the working , sketch the steady state and dynamic characteristics of power semiconductor devices, types of power converters and their applications, Peripheral effects, and derive relevant expressions for their performance parameters etc.
CO2: Formulate equations and estimate circuit components, power loss for given specifications of operation of power devices under steady state and dynamic conditions.
CO3: Apply relevant expressions to analyze the performance of power converters.
CO4: Independently, and in a group study, collate information/data, comprehend a topic related to specific applications of Power Electronics .
CO5: Design, simulate and build efficient power conversion systems/subsystems for given specifications for various applications and effectively interpret the results obtained.
CO6: Make effective technical presentations on the work carried out and communicate effectively to an audience.

Course Title	**Modern Control Theory**				
Course Code	**16EE6DCMCT**	**Credits**	**3**	**L-T-P-S**	**2-1-0-0**
CIE	**50 Marks(100% weightage)**	**SEE**	**100 Marks(50% weightage)**		

Prerequisites:

Basic Electrical Engineering, Linear Circuit analysis, Control systems

Course Description:

This course covers creation of state models using physical variables, phase variables and canonical variables and solution of state equations. It also deals with the various techniques used to analyse the controllability and observability of a system. Basics about nonlinear systems are also dealt with.

UNIT-I		**6 hours**

State Variable Analysis and Design - Introduction, concept of state, state variables and state model, state modeling of linear systems, linearization of state equations. State space representation using physical variables and canonical variables

UNIT-II		**6 hours**

Derivation of transfer function from state model, Eigen values, Eigen vectors, generalized Eigen vectors. Solution of state equation ,state transition matrix and its properties, computation using Laplace transformation, power series method, Cayley -Hamilton method

UNIT-III		**4 hours**

Concept of controllability and observability, methods of determining the same, Effect of Pole-Zeros cancellation. Duality.

UNIT-IV		**5 hours**

Pole placement techniques - Stability improvements by state feedback, necessary & sufficient conditions for arbitrary pole placement, state regulator design, and design of state observer.

UNIT-V		**5 hours**
Non-Linear systems - Introduction, behavior of non-linear system, common physical non linearity –saturation, friction, backlash, dead zone, relay, multivariable non-linearity. Phase plane method, singular points, stability of nonlinear system, limit cycles, construction of phase trajectories.		
Text books:		
1	**Digital control &state variable methods**- M.Gopal,THM Hill , 2nd edition ,2003	
2	**Control system Engineering I**- J .Nagarath&M.Gopal, New Age International (P)Ltd, 3rd edition,2003	
Reference books:		
1	**State space Analysis of Control Systems**- Katsuhiko Ogata- Prentice Hall Inc,2007	
2	**Automatic Control Systems**- Benjamin C. Kuo&FaridGolnaraghi , John Wiley & Sons, 8th edition,2003	
3	**Modern Control Engineering**- Katsuhiko Ogata-PHI 2003	
4	**Modern control systems**-Dorf& Bishop- pearson education,1998	

Course outcomes At the end of the course ,the student will have the ability to
CO1: Create state models using physical variables ,mathematical variables and to solve the state equation
CO2: Apply appropriate techniques to analyze the system for its controllability and observability.
CO3: Apply relevant concepts to design systems with state feedback to meet the specifications; mathematically represent nonlinear systems and analyze a few simple models.

Course Title	**UTILIZATION OF ELECTRIC POWER (Department elective II)**				
Course Code	**16EE6DE2UP**	**Credits**	**3**	**L-T-P-S**	**3-0-0-0**
CIE	**50Marks(100% weightage)**	**SEE**	**100 Marks(50% weightage)**		

Prerequisites:

Principles of DC Motors, Induction Motor and their characteristics

Course Description:

The course imparts knowledge about various types of Electric heating and welding employed in different industrial applications, interior and exterior illumination systems anddesign of lighting schemes. Traction systems and their behavior, Speed control and Braking of motors used in traction, Power Supply used for traction.

UNIT-I		**8 hours**

Electric Heating & Welding - Advantages of Electric Heating- Modes of heat transfer- Resistance heating – Infra red heating – Arc furnaces Induction Heating- High frequency eddy current heating- Dielectric heating – choice of frequency Resistance welding – arc welding- Ultrasonic welding- Laser Beam Welding, preparation of work-electrodes- Power supply for arc welding- arc welding with D.C and A.C – circuits used in Resistance welding- Comparison of different types of welding

UNIT-II		**6 hours**

Illumination - Production of light – Laws of illumination – lighting calculation – Determination of MHCP and MSCP – Interior and exterior illumination systems – Lighting schemes – Design on lighting schemes – Factory lighting – Flood lighting – Electrical lamps – Gaseous discharge lamps – High pressure and low pressure neon Lamps –High frequency , Low pressure discharge tubes, Induction Lamps, LED lamps, Numerical problems

UNIT-III		**8 hours**

Electric Traction - Different types of traction- systems of Electric Traction- Track Electrification- comparison between DC and AC systems of Railway electrification Train movement and Energy Consumption: Typical Speed- Time curves- Factors affecting schedule speed simplified speed-time curve- Mechanics of Train movement-Tractive effort – Power, Energy output from the driving axles- Determination of specific energy output- factors affecting energy consumption, Specific Energy consumption- Dead weight, accelerating weight and adhesion weight- Numerical problems

UNIT-IV		**9 hours**
Electric Traction Motors and Their Control - Introduction – Types of motors and their characteristics used for Electric Drives : D.C. Motors, A.C. Motors, Linear Induction Motor, A.C. Series Motor- Selection of Motors- Starting of D.C. Motors – Speed Control of D.C. Motors, Induction Motors – Heating & Cooling of Electrical Machines –Insulation Materials- Motors for particular Services		
UNIT-V		**8 hours**
Braking of Traction Motors and Power Supply for Traction systems- Regenerative braking- advantages and disadvantages – Calculation of energy returned- Current collector-overhead construction for tramways and trolley buses and railways-sag and tension calculation for trolley wire – Substations- their location- Feeding and Distributing Systems- Interference in Telecommunication circuits.		

Text books:	
1	**A Course in Electrical Power**–SoniGupta&Bhatnagar, **,**DhanpatRai and Sons,1987 Unit I,II,III,IV,V
2	**Utilisation of Electrical Power -** Rajput- R.K., Laxmi Publications, 2nd edition,2008 Unit IV
e-Books	
1	Light Emitting Diodes (LEDs) For General Illumination (PDF 72P),http://www.freebookcentre.net/Electronics/Light-Emitting-Diodes PDF | 72 Pages
2	www.edisontechcenter.org/InductionLamps.
Reference books:	
1	**Utilization of electric energy**-Openshaw Taylor**,** Orient Longman89,1971
2	**Electric Power**-Uppal S. L., Khanna Publications,1992

Course outcomes At the end of the course ,the student will have the ability to
CO1: Apply the knowledge of mathematics , science and electrical engineering principles to analyze operationdifferent types of electrical heating gadgets such as ovens and welding equipment.
CO2: Apply the knowledge of mathematics and electrical engineering principles to design lighting systems fordifferent applications.
CO3: Apply the basic knowledge of engineering to analyze the behavior of electrical traction systems under various conditions of operation.

Course Title	Circuit Design using VLSI (Department Elective II)				
Course Code	16EE6DE2CV	Credits	03	L-T-P-S	3-0-0-0
CIE	50 Marks(100% weightage)	SEE	100 Marks(50% weightage)		

Prerequisites:

Digital Electronics , Analog Electronics, Fundamentals of HDL

Course Description: This course helps to understand the basic concepts of various MOS technologies such as NMOS and CMOS technologies. This course also helps to write, identify the delays in NMOS/CMOS technologies. Use of stick diagrams, mask layouts, Scaling of various parameters based on application. Various combinational and structural designs for basic circuits of VLSI can also be adopted.

UNIT-I		**6 hours**

A Review of Microelectronic 3 and an Introduction to MOS and VLSI technologies, MOS transistors fabrication – NMOS and CMOS (N-Well & P-Well), thermal aspects, production of E-beam masks.

UNIT-II		**6 hours**

Relationship between Drain to Source current Ids versus Vds. MOS transistor characteristics-trans-conductance (gm) and output conductance (gds), figure of merit, NMOS Pass transistor concept. NMOS and COMS inverters. Latch up of CMOS.

UNIT-III		**9 hours**

Stick diagrams, design, symbolic diagrams of NMOS in NMOS design style and CMOS in CMOS design style. Importance of Lambda based rules. Basic Circuit Concepts: Sheet resistance, capacitance layer, inverter delays (NMOS, CMOS and Cascade), wiring capacitance.

UNIT-IV		**8 hours**

Scaling of MOS Circuits. Scaling model and scaling factors. Limitations of scaling. Subsystem Design and Layout - Some architecture issues- other systems considerations.Some observations on design process.Two input NMOS & CMOS - NAND and NOR gates

UNIT-V		**10 hours**

Forms of CMOS logic- Pseudo NMOS logic, Dynamic CMOS logic, CMOS domino logic, n-p CMOS logic. Examples of structural design-A Parity generator, Bus Arbitration logic for n-line

bus, 4x1 multiplexers, Four line Gray code to Binary code converter, two phase clocking. Concept of dynamic register element, Dynamic shift register. An Illustration of design process.	
Text books:	
1.	**Basic VLSI Design** -Pucknell Douglas Al , PHI , 3rd Edition,1994
Reference books:	
1.	**Fundamentals of Modern VLSI Devices**-Yuan TaunTak H Ning, Cambridge Press, South Asia Edition 2003..
2.	**ModernVLSI Design** - Wayne wolf , Pearson Education Inc. 3rd edition 2003
Course Outcomes: Upon the completion of the course the student must be	
CO1: Able to describe and compare various types of VLSI technology. Also understand the methodology of fabrication process.	
CO2: Apply the knowledge of MOS technology for simple analog/digital circuits.	
CO3: Use of scaling methods based on various circuit parameters and apply scaling.	
CO4: To identify the various NMOS and CMOS technology to be used based on their applications and demonstrates the working of a few VLSI circuits	

Course Title	**COMMUNICATION SYSTEMS (Department Elective II)**				
Course Code	**16EE6DE2CS**	**Credits**	**3**	**L-T-P-S**	**3-0-0-0**
CIE	**50 Marks(100% weightage)**	**SEE**	**100 Marks(50% weightage)**		

Prerequisites:

Signals and Systems, Basic Electronics

Course Description:

This course provides an understanding of communication theory as applied to transmission of information bearing signals with equal emphasis given to both analog and digital communication techniques. This is a foundation course for Computer Communication Networks and Distribution computing courses.

UNIT-I		**8 hours**

Amplitude modulation: Time-Domain Description, Frequency domain description, Generation of AM waves, Detection of AM waves, Double Sideband – Suppressed Carrier Modulation, Time-Domain Description,Frequency domain description Generation of DSBSC waves, Coherent Detection of DSBSCModulated waves. Costas Receiver, FDM

UNIT-II		**8hours**

Angle modulation: Basic Concepts, Frequency Modulation, Narrow Band Frequency Modulation, Wide Band Frequency Modulation, FM waves, Generation of FM waves, Direct FM, demodulation of FM waves.

UNIT-III		**8 hours**

Noise in Analog modulation systems: Signal-to-noise ratios, AM receiver model, Signal-to - noise ratios for coherent reception, DSBSC receiver, SSB receiver, noise in AM receivers using envelope detection, threshold effect, FM receiver model, noise in FMreception, FM threshold effect, pre-emphasis and de-emphasis in FM systems.

UNIT-IV		**8 hours**

Pulse modulation:Sampling theorem for low-pass and band-pass signal, PAM, natural sampling, flat-top sampling,signal recovery through holding, quantization of signals, quantization error, Pulse Code Modulation, delta Modulation, Adaptive deltamodulation.

UNIT-V		**7hours**

Digital Modulation: Introduction, Binary Shift Keying, Phase – Shift Keying, Frequency – Shift

Keying, Summary of Three Binary Signaling Schemes, line codes,TDM.	
Text books:	
1	**An introduction to Analog and Digital communication** - Simon Haykin, Wiley publications, 2nd Edition,2010
2	**Principles of communication systems** -Taub and Schilling, Tata McGraw Hill Publications, 4th edition,2015
Reference books:	
1	**Electronic Communication Systems** - Blake, Thomson publishers, 2nd Edition,2002
2	**Electronic Communication Systems** -George Kennedy, Tata McGraw Hill Publications, 4th edition,1999
E-learning:	
1.	NPTEL course: Communication Engineering by Prof. Surendra Prasad, Department of Electrical Engineering, Indian Institute of Technology, Delhi
2.	NPTEL course: Advance Digital Communication by Dr. P.R. Sahu, IIT Guwahati

Course outcomes At the end of the course ,the student will have the ability to
CO1: Acquire basic knowledge of communication systems.
CO2 : Characterize and analyze different modulation techniques for analog & digital communication
CO3: Analyze the effect of noise on analog signals

Course Title	ELECTRICAL MACHINE DESIGN (Department Elective II)				
Course Code	16EE6DE2MD	Credits	3	L-T-P-S	3-0-0-0
CIE	50 Marks(100% weightage)	SEE	100 Marks(50% weightage)		

Prerequisites:

Basic electrical engineering, Electrical Machines and Geometry

Course Description:

This courseprovides a basic knowledge of preliminary design of rotating DC and AC electrical machines by applying fundamental knowledge of physical and mathematical principles which have been already established and considering economic aspects

UNIT-I		5 hours

Principles of Electrical Machine design and Electrical Engineering materials
Introduction, Factors and Limitations in design of electrical machines. Introduction to Computer aided design – Analysis method, synthesis method and Hybrid method. General procedure for design optimization [Examples only for discussion]
Electrical Engineering materials – conductor, magnetic and insulating materials used in electrical machines.

UNIT-II		7 hours

General Concepts and Constraints of Design of rotating electrical machines–

Relation between ratings and dimensions of rotating machines, Symbols, Main dimensions, Total loadings, Specific loadings, Output coefficient, Factors affecting size of machines, Choice of specific loadings, Variation of output and losses with linear dimensions, Separation of D and L – DC machine, Three phase Induction motor, Three phase synchronous machine, Limiting values of D and L, Ventilating ducts

UNIT-III		10 hours

Design of Armature and Commutator DC machine - Selection of number of poles, Guiding factors, Pole proportions, Length of air gap, Pole face profile. Design of Armature – Choice of Armature winding, Number of armature conductors, coils, Number of armature slots – selection and guiding factors, Cross-section of armature conductors, Insulation of armature windings, Slot dimensions, Depth of armature core.

Design of Commutator and Brushes – Commmutator diameter, number of segments, length of commutator, dimensions of brushes, Losses of Commutator surface and permissible temperature rise.		
UNIT-IV		**8 hours**
Design of Three phase Cage rotor Induction Motors Stator Design- stator winding, turns per phase, stator conductors, shape of slot, number of slots, area of slots, length of mean turn, stator teeth, stator core. Cage rotor design: Number of rotor slots- rules for selecting slots, reduction of harmonic torques, Design of Rotor bars and slots – Rotor bar current, area of rotor bars, shape and size of slot, slot insulation. Design of end rings – End ring current, Area of end rings.		
UNIT-V		**9 hours**
Design of rotor of three phase synchronous machines **Design of salient pole rotor**-height of pole, design of damper winding, height of pole shoe, pole profile. Magnetic circuit, open circuit characteristics, determination of full load field MMF, design of field winding. **Design of Non salient pole rotor** – rotor design of turbo alternator (type of winding, procedure for rotor winding design)		

Text books:	
1	**A course in electrical Machine design -** A.K. SAWHNEY, DhanpatRai and Co,6th edition, 2006
2	**Principles of Electrical machine Design**- R.K. Agarwal,SKKataria& Sons,2009
Reference books:	
1	**Performance and design of AC Machines -** M.G. Say, 3rd edition, 2002
2	**Design of Electrical Machines**- V.N. Mittle, Standard Publishers, 4 th Edition,2009

Course outcomes At the end of the course ,the student will have the ability to
CO1: Apply the knowledge of fundamental principles, factors electrical engineering materials and use of modern tools for the design of electrical machines.
CO2: Apply the general concepts and constraints in design of rotating electrical machines in design of electrical machines.
CO3: Design thedimensions of different parts and details of windings of rotating electrical machines
CO4: Analyse the effect ofdimensions of the different parts of various electrical machines on theoutput and losses.

Course Title	**DISPLAYS FOR EMBEDDED SYSTEM (Cluster Elective I)**				
Course Code	**16TE6GE1DE**	**Credits**	**3**	**L-T-P-S**	**3-0-0-0**
CIE	**50 Marks(100% weightage)**	**SEE**	**100 Marks(50% weightage)**		

Prerequisites:

C Programming

UNIT-1		**7 hours**

Introduction:
Introduction to display devices, Types of display devices, CRT, vector displays, raster displays, character based frame buffer, LED, LCD, GLCD, Touch screen, plasma display panels, FEDs.

UNIT-2		**7 hours**

Driving LEDs:
Programming LEDs with iterative loops: for, while, do-while, Branching with if, break, continue, switch statements, usage of pointers and arrays in LED programming, Number arrays for LEDs, LED class definition, Macros, Dynamic memory allocation, exception handling, Example programs to turn on/off LED on board, Controlling brightness of LED by changing the parameters of PWM signal.

UNIT-3		**7 hours**

Programming with CLCD
Comparison of CRT and LCD, Reflective and backlit LCDs, Active matrix LCDs, Programming with character LCD to display one line, printing values on different lines of CLCD, display a string keep changing the message with delay, shifting the characters right and left on CLCD, example application program on display system for railways on CLCD.

UNIT-4		**7 hours**

Programming with GLCD and Touch screen
Introduction to GLCD, Introduction to touch screen technology, components of touch screen, Types of touch screen technology, resistive, capacitive, saw and infrared touch screen. Loading images of different formats onto GLCD, display an image with four quadrants of different color, program to set the GLCD as touch panel and display the coordinates of touch panel on screen.

UNIT-5		8 hours
OS mode and DSP for Embedded system Comparison of non OS mode and OS mode of embedded system, Linux architecture, DSP and C6Accel, Q format data representation ,Using 7 segment LED and LCD in OS mode, Frame buffers, Touch interfaces in OS mode, File system API, Debugging.		
Text book		
1	**Interfacing with C++ -** Jayanthakatupitiya and Kim Bentley ,springer publications (unit2)	
2	http://www.slideshare.net/abhishekpal1991/pal-17140724 (unit 1)	
3	http://www.vrarchitect.net/anu/cg/Display/printCG.en.html (unit1)	
4	UTLP practitioner workshop & UTLP Expert workshop training materials from Mission 10x, Wipro Technology. (unit3,unit4,unit5) (http://www.mission10x.com/m10x/technology/learning	

Course outcomes At the end of the course ,the student will have the ability to
CO1: Uunderstandthe working principle behind various display devices for embedded systems.
CO2: Apply C programming concepts toprogram LED and LCDs for embedded displays
CO3: Analyse and investigate working of GLCDs for both graphic displays and Touch interfaces
CO4: Work as an individualandtherebyconduct experiments using UTLP for a given application/problem statement
CO5 : Develop, test, analyze and demonstrate applications of telecommunication using UTLP

Course Title	**CRYPTOGRAPHY AND NETWORK SECURITY (Cluster Elective I)**				
Course Code	**16TE6GE1CN**	**Credits**	**3**	**L-T-P-S**	**3-0-0-0**
CIE	**50 Marks(100% weightage)**	**SEE**	**100 Marks(50% weightage)**		

UNIT-1		**7hours**
Introduction, Services, mechanisms and attacks, The OSI security Architecture, A model for network security, A model for network security, Symmetric Ciphers: Symmetric Cipher model, Symmetric Ciphers: Symmetric Cipher model, Substitution techniques Transposition technique,		
UNIT-2		**8 hours**
Simplified DES, Block Cipher Principles, Data encryption Standard, The strength of DES, Differential and Linear Cryptanalysis, Block Cipher Design Principles, Block Cipher modes of Operation, Advanced Encryption Standar, Triple DES, Blow fish		
UNIT-3		**7 hours**
Fermat's and Euler's theorem Chinese Remainder Theorem ,Principles of public key cryptosystems, The RSA algorithm, Diffe-Hellman key exchange, Elliptic Curve Arithmetic, Elliptic Curve cryptography		
UNIT-4		**7 hours**
Message Authentication and Hash Functions: Authentication requirements, Authentication functions, Message authentication codes, Hash functions, Security of hash functions and MAC. Digital Signatures, Digital Signature standard, Electronic Mail Security : Pretty Good Privacy,		
UNIT-5		**7 hours**
Intruders, Intruder detection, Password management, Viruses and related threats, Firewalls design principles, Trusted systems.		
Text book		
1	**Cryptography and Network Security- Principles and Practice**: William Stallings, Third Edition	

Reference Books	
1	**Data Communication and Networking –** BehrouzForouzan , Tata McGraw Hill ,5th Edition.
Course outcomes At the end of the course ,the student will have the ability to	
CO1: Define, understand and explain concepts related to network security	
CO2: Apply the knowledge of communication and coding to telecommunication networks	
CO3: Design, implement and analyze algorithms for secure transmission	

Course Title	**BIO-MEMS (Cluster Elective I)**				
Course Code	**16ML6GE1BM**	**Credits**	**3**	**L-T-P-S**	**3-0-0-0**
CIE	**50 Marks(100% weightage)**	**SEE**	**100 Marks(50% weightage)**		

UNIT-1		**7 hours**
MEMS and Microsystems: Working principle of Microsystems, materials for MEMS and Microsystems, micromachining, System modelling and properties of materials. **Micro sensors and Actuators**: Mechanical sensors and actuators – beam and cantilever, Piezoelectric materials, thermal sensors and actuators- micro machined thermocouple probe, Peltier effect heat pumps, thermal flow sensors		
UNIT-2		**9 hours**
Micro Opto Electro Mechanical Systems: Fundamental principle of MOEMS technology, light modulators, beam splitter, microlens, digital micromirror devices, light detectors, optical switch. **Microfluidic Systems:** Microscale fluid, expression for liquid flow in a channel, fluid actuation methods, electrophoresis, microfluid dispenser, microneedle, micropumps continuous flow system.		
UNIT-3		**7 hours**
Scaling laws in miniaturization: Introduction to scaling, scaling in geometry, scaling in rigid body dynamics. **Microfabrication techniques:** Introduction, photolithography, electron beam lithography, and soft lithography, chemical vapour deposition, Impurity doping, Etching, micromachining.		
UNIT-4		**9 hours**
Introduction to Bio-MEMS: what are biosensors? , the driving force behind biomedical applications, biocompatibility, reliability considerations, regulatory considerations, Emerging BioMEMs Technology: minimally invasive surgery, point care clinical diagnosis, pressure and flow measurement in cardiovascular system, diabetes, endoscopy, neurosciences, oncology, ophthalmology.		
UNIT-5		**7 hours**
Chemical and biomedical micro systems: Introduction, sensing mechanism , primary sensing principle, membrane transducer materials,		

Chem-lab-on-a-chip(CLOC), chemoresistors, chemocapacitors,chemotransistors, E-Nose, Mass sensitive chemo sensors, fluorescence detection, SAW sensors.	
Text book	
1	**MEMS** –NitaigourPremchandMahalik, Tata McGraw Hill Publishing Company, New Delhi, 2007
2	**Fundameantals of BioMEMS and Medical Microdevices** - Steven S. SalitermanWileyInterscience.
Reference Books	
1	**MEMS and Microsystems design and manufacture** - Tai-Ran-Hsu, Tata McGraw Hill Publishing Company, NewDelhi, 2002
2	**Smart material systems and MEMS design and development methodologies** - Vijay K Varadan, K J Vinoy, S Gopakrishnan, WILEY, India, 2006
E-Books:	
1	https://www.crcpress.com/Bio-MEMS-Technologies-and-Applications/Wang-Soper/p/book/9780849335327
2	https://www.amazon.in/Bio-MEMS-Technologies-Applications-Wanjun-Wang-ebook/dp/B009AI34IS
Moocs:	
1	https://www.extension.harvard.edu/academics/courses/introduction-mems-biomems/14876
2	https://onlinecourses.nptel.ac.in/noc15_me01/preview
Course outcomes At the end of the course ,the student will have the ability to	
CO1: Apply knowledge of mathematics, science and engineering to understand the working principle of MEMS and sensors, Microfluidic Systems, Bio-Mems	
CO2: Identify, analyse and formulate the computing requirement using MOEMS technology, Microfabrication techniques	
CO3: Understand the environmental impact & safety issues of biomems with reference to medical standards and ethics.	
CO4: Ability to function, engage in implementing, communicating the concepts and principles learnt in course using softtool	

Course Title	**Advanced Medical Image Processing (Cluster Elective I)**				
Course Code	**16ML6GE1IP**	**Credits**	**3**	**L-T-P-S**	**3-0-0-0**
CIE	**50 Marks(100% weightage)**	**SEE**	**100 Marks(50% weightage)**		

UNIT-1		**9 hours**
MORPHOLOGICAL IMAGE PROCESSING: Preliminaries, Erosion and Dilation, Duality, Opening and Closing, The Hit-or-Miss Transformation, Basic Morphological Algorithms: Boundary Extraction, Hole Filling, Extraction of Connected Components, Convex Hull, Thinning, Thickening, Skeletons, Pruning, Morphological Reconstruction, Gray-Scale Morphology, Erosion and Dilation, Opening and Closing.		
UNIT-2		**8 hours**
IMAGE SEGMENTATION: Fundamentals, Point, Line, and Edge Detection, Detection of Isolated Points, Edge Models, Edge Linking and Boundary Detection, Thresholding, Basic Global Thresholding, Optimum Global Thresholding using Otsu's Method. Region Based Segmentation, Region Growing, Region Splitting and Merging, Segmentation Using Morphological watersheds, watershed segmentation Algorithm		
UNIT-3		**8 hours**
REPRESENTATION AND DESCRIPTION: Representation of Boundary (Border), Chain Codes, Polygonal Approximations Using Minimum-Perimeter Polygons, Signatures, Boundary Segments, Skeletons, Boundary Descriptors, Shape Numbers, Fourier Descriptors, Statistical Moments, Regional Descriptors, Topological Descriptors, Texture, Moment Invariants, Use of Principal Components for Description		
UNIT-4		**6 hours**
OBJECT RECOGNITION: Patterns and Pattern Classes, Recognition Based on Decision-Theoretic Methods, Matching, Optimum Statistical Classifiers, Neural Networks, Structural Methods, Matching Shape Numbers, String Matching		
UNIT-5		**8 hours**
WAVELETS AND MULTIRESOLUTION PROCESSING: Image Pyramids, Sub band Coding, The Haar Transform, Multi resolution Expansions, Series Expansions, Scaling Functions, Wavelet Functions, Wavelet Transforms in One Dimension, The Wavelet Series Expansions, The Discrete Wavelet Transform, The Continuous Wavelet Transform. The Fast		

Wavelet Transform. Wavelet Transforms in Two Dimensions. Wavelet Packets.	
Text book	
1	**Digital Image Processing** - Rafael C. Gonzalez & Richard E. Woods, Third Edition. Pearson Education Inc
2	**Image Processing, Analysis and Machine-Vision** - Milan Sonka, Vaclav Hlavac& Roger Boyle, Second Edition
Reference Books	
1	**Digital Image Processing using MATLAB** - Rafael. Gonzalez & Richard E. Woods, Second Edition. Pearson Education Inc.
2	**Digital Image Processing** - S Jayakumaran, S Esakkirajan, T Veerakumar, Tata McGraw Hill Education Private Ltd
E-Books:	
1	http://www.sciencedirect.com/science/book/9780123739049
2	http://www.springer.com/us/book/9781441997692
Moocs:	
1	https://cs.uwaterloo.ca/~jorchard/cs473/CS473/Welcome.html
2	https://spie.org/education/online-courses-and-dvds/online-course-detail?course_id=P0843553

Course outcomes At the end of the course ,the student will have the ability to
CO1: Apply knowledge of Mathematics and Engineering to use Morphological operations in image Processing
CO2: Identify and analyze a problem and formulate the computing requirements for segmentation of images
CO3: Implement the processes to detect and recognize an object in the images.
CO4: Apply wavelet transform to compress and enhance the quality of images.
CO5: Use current techniques and modern tools to improve the image analysis

Course Title	**DATA STRUCTURES AND ALGORITHMS (Cluster Elective I)**				
Course Code	**16EC6GE1DA**	**Credits**	**3**	**L-T-P-S**	**2-1-0-0**
CIE	**50 Marks(100% weightage)**	**SEE**	**100 Marks(50% weightage)**		

UNIT-1		**5L+ 1THrs**
INTRODUCTION: Data Representation, Linear lists, Formula-based representation linked representation, Indirect addressing, simulating pointers.		
UNIT-2		**5L+ 1THrs**
ARRAYS AND MATRICS: Arrays, Matrices, Special matrices, spare matrices		
UNIT-3		**5L+ 2THrs**
STACKS: The abstract data type, Derived classes and inheritance, Formula based representation, Linked representation, Applications.		
UNIT-4		**5L+ 2THrs**
QUEUES: The abstract data types, Derived classes and inheritance, Formula based representation, Linked representation, Applications.		
UNIT-5		**4L+ 6THrs**
HASHING and TREES: Dictionaries, Linear representation, Hash table representation.Trees, Binary trees, Properties and representation of binary trees, Common binary tree operations, Binary tree traversal the ADT binary tree, Heaps – Min and Max, insertion into heaps, Binary Search Trees, AVL trees.		

Reference Books

1	**Data structures, Algorithms, and applications in C++** - SartajSahni, McGraw Hill.2000.
2	**Data structures, Algorithms, and applications**-Vaidyanathan

Course outcomes

At the end of the course ,the student will have the ability to

CO1: Identify, describe, differentiate and develop the different types of data structures

CO2: Interpret data as arrays and matrices. Develop and Differentiate special matrices

CO3: Understand, develop and create applications using stack and queue structures

CO4: Identify, demonstrate and construct file structuresOutline, identify, model and analyze

different tree structures. Develop applications for trees					
Course Title	**SENSOR TECHNOLOGY (Cluster Elective I)**				
Course Code	**16EC6GE1ST**	**Credits**	**3**	**L-T-P-S**	**3-0-0-0**
CIE	**50 Marks(100% weightage)**	**SEE**	**100 Marks(50% weightage)**		

UNIT-1		**6 hours**
Sensor Characteristics: Transfer function, span, accuracy, calibration, hysteresis, non linearity, saturation, dead band, resolution, special properties, output impedance, excitation, dynamic characteristics, environmental factors, reliability, application characteristics, and uncertainty		
UNIT-2		**8 hours**
Physical principles of sensing: Electric charges, fields and potentials, capacitance, magnetism, induction, resistance, piezoelectric effect, pyro-electric effect, hall effect, Peltier effect and seebeck effect, sound waves, temp and thermal props of mats, heat transfer, light, dynamic models of sensor elements		
UNIT-3		**8 hours**
Sensors for embedded systems application_1: Photoelectric sensors, detection methods, proximity sensors: Inductive and capacitive, limit switches, LED, microwave sensors, laser sensors, bar code identification systems, OCRs, position sensors		
UNIT-4		**8 hours**
Sensors for embedded systems application_2: Displacement and level sensors, velocity and acceleration sensors, force, strain and tactile sensors, pressure sensors		
UNIT-5		**6 hours**
Digital transducers and applications: Adv of digit ran, shaft encoders, optical encoders, digital tachometer, Hall effect sensors, linear encoders, Moire Fringe displacement sensors, binary transducers		

Text Books	
1	**Handbook of modern sensors: Physics, designs, applications** - JACOB FRADEN, 3rd edition, Springer.
2	**Sensors Handbook** -SabrieSoloman, 2nd edition, McGraw Hill.
3	**Sensors and Actuators control systems Instrumentation-** Clarence W de Silva, CRC Press

Course Title	**VLSI TESTING AND DESIGN FOR TESTABILITY (Cluster Elective I)**				
Course Code	**16EC6GE1VD**	**Credits**	**3**	**L-T-P-S**	**3-0-0-0**
CIE	**50 Marks(100% weightage)**	**SEE**	**100 Marks(50% weightage)**		

UNIT-1		**4 hours**
Introduction: Testing Philosophy, Role of testing, Digital and Analog VLSI Testing. How to Test chips- types of Testing, Automatic Test equipment (ATE), Electrical parametric testing, Yield, Defects, Errors and Faults		
UNIT-2		**10hours**
Fundamentals of VLSI testing: Fault models, Fault equivalence, Fault collapsing, Automatic test pattern generation: Path sensitization technique, Boolean difference, D-algorithm, PODEM algorithm, Iddq testing, Delay fault testing. Example problems. CAD tool usage for ATPG		
UNIT-3		**8 hours**
Design for testability**:** Controllability and observability, Scan design and scan based testing, Level sensitive scan Design (LSSD), Test interface and boundary scan		
UNIT-4		**6 hours**
Memory testing: Memory fault models, Test algorithms for RAMs, Detection of pattern sensitive faults Example problems		
UNIT-5		**8 hours**
Built in self-test (BIST): BIST process, BIST implementation, BIST pattern generation methods, output response analysis		

Reference Books

1	**Essentials of Electronic Testing for Digital Memory and Mixed Signal VLSI Circuits** - M. L. Bushnell and V.D. Agrawal, Springer, 2005
2	**Digital Circuit Testing and Testability** - Parag.K.Lala, Academic press

3	**Principles of CMOS VLSI Design: A System Perspective** - Neil Weste and K. Eshragian, Third Edition, Pearson Education (Asia) Pvt. Ltd, 2006.

Course Title	**PHYSICAL DESIGN (Cluster Elective I)**				
Course Code	**16EC6GE1PD**	**Credits**	**3**	**L-T-P-S**	**3-0-0-0**
CIE	**50 Marks(100% weightage)**	**SEE**	**100 Marks(50% weightage)**		

UNIT-1		**8 hours**
Libraries Standard cells, Transistor sizing, input-output pads, ESD and its sources, Library characterization, Timing models: Delay model, NLDM, Polynomial Delay model, Current source model.		
UNIT-2		**7hours**
Partitioning and Floor planning Approximation of Hyper Graphs with Graphs, Kernighan-Lin Heuristic Ratio cut partition, Fiduccia&Mattheyses, Technology File, Circuit Description Design Constraints, Design planning, Pad placement, power planning, Macro placement, Clock planning		
UNIT-3		**7 hours**
Placement Global Placement, detail placement, clock tree synthesis, power analysis		
UNIT-4		**7 hours**
Routing (clock, power/ground, signal nets): Special routing, Global routing, Detailed routing, Extraction.		
UNIT-5		**7 hours**
Verification Functional Verification, Timing verification (STA), Physical Verification, SI analysis, Power Analysis		
Text Books		
1	**Physical Design Essentials-An ASIC Design Implementation Perspective** - KhosrowGolshan, 2007 Springer Science+Business, Media.	
Reference books		
1	**Timing Verification of Application-Specific Integrated Circuits (ASICs)**-F. Nekoogar. Prentice Hall PTR, 1999.	

2	**An Introduction to VLSI Physical Design** - Sarafzadeh, C.K. Wong, McGraw Hill International Edition 1995.
3	**Physical Design and Automation of VLSI systems** - Preas M. Lorenzatti, The Benjamin Cummins Publishers, 1998.

Course outcomes At the end of the course ,the student will have the ability to
CO1: Learn the advanced concepts of modern VLSI system design including standard cells, cell libraries, IPs etc
CO2: Partition the system into sub blocks and do floor planning.
CO3: Do global placement and detail placement and clock tree synthesis
CO4: Route signals and do physical verification

Course Title	**PROBABILITY AND RANDOM PROCESS (Cluster Elective I)**				
Course Code	**16EC6GE1PR**	**Credits**	**3**	**L-T-P-S**	**3-0-0-0**
CIE	**50 Marks(100% weightage)**	**SEE**	**100 Marks(50% weightage)**		

UNIT-1		**8 hours**
Introduction to Probability theory: Experiments and Sample space, Events, Probability definition and Axioms, Joint and conditional probabilities, Baye's theorem- Independent events, Bernoulli Trials		
UNIT-2		**7hours**
Random variables, Distribution functions, Density functions: CDF, PDF, Gaussian random variable, Binomial, Poisson, Uniform, Exponential and Rayleigh types of random variable, Probability Mass Function		
UNIT-3		**7 hours**
Operation on a single random variable: Expectation, EV of random variables, EV of functions of random variables, Moments, Central moments, Conditional expected values		
UNIT-4		**7 hours**
Random processes. Stationarity and ergodicity. Strict sense and wide sense stationary processes. Mean, Correlation and Covariance functions.		
UNIT-5		**7 hours**
Spectral properties of random processes – power spectral density and its properties, relation with autocorrelation, cross PSD and cross correlation		

Text Books

1	**Probability, Random variables and random signal principles** - Peyton Z. Peebles, TMH, 4th edition, 2015.
2	**An Introduction to Analog and Digial Communications** - S.Haykins, Wiley, 2003
3	http://nptel.ac.in/courses/117105085

Course outcomes At the end of the course ,the student will have the ability to
CO1: Understand and analyze the concepts of Probability theory.
CO2: Understand and analyze the concepts of Random Variables.
CO3: Understand and analyze operation on a single random variable.
CO4: Understand and analyze the conceptsof Random process.
CO5: Understand and analyze the Spectral properties of Random process

Course Title	**ADVANCED MICROCONTROLLERS & APPLICATIONS (Cluster Elective I)**				
Course Code	**16EC6GE1AM**	**Credits**	**3**	**L-T-P-S**	**2-1-0-0**
CIE	**50 Marks(100% weightage)**	**SEE**	**100 Marks(50% weightage)**		

UNIT-1		**5L+2THrs**
Migration from 8051 to 32bit cores, RISC design and ARM Design Approach, Advantages of ARM, ARM Organization, Registers, Pipeline, Exceptions & Interrupts, Introduction to Cortex M3 Processor & its applications		
UNIT-2		**6L+3THrs**
Cortex M3 Registers, Operation Modes, Thumb2 Technology & Instruction Set Architecture, Exceptions & Nested Vector Interrupt Controller, Memory Systems.		
UNIT-3		**5L+3THrs**
Cortex M3 Programming: A typical development flow, Using C, CMSIS, Using Assembly, Exception Programming		
UNIT-4		**4L+2THrs**
Introduction to Firmware, Boot-loader and Embedded Operating Systems, MPU & MMU, Working With I2C, SPI, CAN & USB protocols.		
UNIT-5		**4L+2THrs**
Applications of ARM Cortex M3: Robotics & Motion Control, WSN, IoT, ARM Cortex for DSP applications.		

Text Books	
1	**The Definitive Guide to ARM Cortex M3** - Joseph Yiu.2nd Edition
2	**ARM System Developer's Guide** - Andrew N Sloss, Dominic Symes, Chris Wright
Reference books	
1	**ARM System-On-Chip Architecture** - Steve Furber, Addison Wesley, Pearson Education, 2nd edition
2	Jagger (Ed) ARM architectural reference manual, Prentice Hall

Course outcomes At the end of the course ,the student will have the ability to
CO1: Acquire the knowledge on ARM organization and the feature rich ARM Cortex architecture.
CO2: Analyze and apply the instruction set of ARM Cortex processor in developing embedded applications using C & CMSIS.
CO3: Recognize the need of firmware, boot- loader, real time operating systems and various communication protocols.
CO4: Demonstrate the development of embedded applications using ARM Cortex platforms.

Course Title	**Electrical & Electronics Engineering Materials (Cluster Elective I)**				
Course Code	**16EE6GE1EM**	**Credits**	**3**	**L-T-P-S**	**3-0-0-0**
CIE	**50 Marks(100% weightage)**	**SEE**	**100 Marks(50% weightage)**		

Prerequisites:

Basics of Physics & Chemistry

Course Description:

This course covers basics of kinetics, chemical bonding and structure of materials. The facts of conductors, resistors and dielectric materials, different types and properties of semiconductors,concept of magnetic materials and their properties,measurement of electrical and magnetic properties of materials.

UNIT-1		**7 hours**

Introduction, Equilibrium, kinetics and crystal geometry - Materials science & Engineering: Classification of engineering materials, level of structure, structure-property relationship in materials.Crystal geometry: The space lattice, space lattice and crystal structure, crystal direction and planes.

UNIT-2		**9 hours**

Atomic structure, chemical bonding and structure of solid - Atomic structure: Quantum states, ionization potential, electron affinityandelectro-negativity. Chemical bonding: bond energy, bond type and bond length, ionic bonding, covalent bonding, metallic bonding, variation of bonding character and properties.Structure of solids: crystalline and non-crystalline states, covalent solids, metal and alloys, ionic solids, the structure of silica and the silicates.

UNIT-3		**7 hours**

Conductors, Resistors and Dielectric materials - Conductors and resistors: The resistivity range, the free electron theory, conduction by free electrons, conductor

and resistor materials, super conducting materials. Dielectric materials: Polarization and dielectric constant, temperature and frequency effects, electric breakdown, ferroelectric materials, piezoelectricity, dielectric losses		
UNIT-4		**8 hours**
Semiconductors - Classifying materials as semiconductor, the chemical bond in Si and Ge, the density of carriers in intrinsic semiconductor; the energy gap, the conductivity of intrinsic semiconductors, extrinsic semiconductors, carrier density in n-type semiconductors, p-type semiconductors, Hall effect and carrier density, photoconductivity, fabrication of integrated circuits		
UNIT-5		**8 hours**
Magnetic Materials, Measurement of Electrical and Magnetic properties - Classification of magnetic materials, diamagnetism, the origin of permanent magnetic dipoles in matter, soft magnetic materials, hard magnetic materials, some properties of ferromagnetic materials, antiferromagnetic materials. Measurement of Electrical and Magnetic properties: Conductivity measurements, dielectric measurements, magnetic measurements, measurements of semiconductor parameters		
Text book		
1	**Materials Science and Engineering** - V. Raghavan,PHI Learning Private Limited, FifthEdition. 42nd reprint2013.	
2	**Electrical Engineering Materials**- A.J. Dekker, Prentice Hall of India Private Limited, 13thre-print1988.	
Reference books:		
1	**An Introduction to Electrical Engineering Materials -**C.S.Indulkar and S. Thiruvengadam, S. Chand & Company Ltd. 3rd Edition, reprint 1985.	
2	**Electronic Engineering Materials and Devices**- JohnAllison,Tata McGraw-Hill Publishing Company Ltd. 9th reprint 1990.	

Course outcomes At the end of the course ,the student will have the ability to
CO1: Understand the physics of equilibrium and kinetics and crystal geometry of engineering materials.
CO2: Understand the concept of atomic structure, chemical bonding, and structure of solid.
CO3: Apply the principle of physics and mathematics to understand about the properties of conductors, semiconductors, dielectric and magnetic materials.
CO4: Apply the concept of conductor, semiconductor, dielectric and magnetic materials to measure properties of these materials

Course Title	**ELECTROMAGNETIC COMPATIBILITY** **(Cluster Elective I – Except EC & IT)**				
Course Code	**16EE6GE1EC**	**Credits**	**3**	**L-T-P-S**	**3-0-0-0**
CIE	**50 Marks(100% weightage)**	**SEE**	**100 Marks(50% weightage)**		

Prerequisites:

Analog Electronic, Digital electronics, Power electronics.

Course Description:

The course covers topics on introduction to EMI/EMC, Cabling, balancing and filtering, grounding, and shielding, Electro static discharge.

UNIT-I		8 **hours**

Introduction - Designing of electromagnetic compatibility, EMC regulation, typical noise path, and Use of network theory, method of noise coupling, miscellaneous noise sources, and method of eliminating Interference.

UNIT-II		**8 hours**

Cabling - Capacitive coupling, effect of shield on magnetic coupling, mutual inductance calculations, magnetic coupling between shield and inner conductor, shielding to prevent magnetic radiation, shielding a receptor against magnetic fields, shield transfer impedance, experimental data, example of selective Shielding, co-axial cable versus shielded twisted pair braided shields.

UNIT-III		**7 hours**

Balancing and filtering - Balancing, power supply decoupling, decoupling filters, amplifier Decoupling driving capacitive loads, high frequency filtering, system bandwidth, and modulation andCoding. Introduction to Grounding - Safety grounds, signal grounds, single point ground systems, hybrid grounds, multipoint ground systems, functional ground layout, practical low frequency grounding, hardware grounds

UNIT-IV		**8hours**

Shielding - Near field and far fields, characteristic and wave impedance's shielding effectiveness, absorption loss, reflection loss, composite absorption and reflection loss, summary of shielding equation, Shielding with magnetic material, experimental data, apertures, wave guide below cut off, conductive gaskets, conductive windows, conductive coatings, cavity resonance, brooding of shields.

UNIT-V		8 hours
Electrostatic discharge - State generation, human body model, static discharge, and ESD Protection in equipment design, software and ESD protection, ESD versus EMC.		
Text books:		
1	**Noise reduction techniques in electronic systems -** Henry W. Ott, John Wiley, 2nd edition, 1988	
2	**Engineering Electromagnetic Compatibility: Principles, Measurements & Technologies-** V. Prasad Kodali, S. Chand & Co. Ltd. Delhi, 2000	
Reference books:		
1	Electromagnetics Explained – A Hand Book For Wireless/Rf,Emc And High Speed Electronics	

Course Outcomes: After the completion of the course, the student will be able to
CO1: Analyze the fundamentals and reason for noise in Analog electronics, Power Electronicsand Digital electronics circuit**.**
CO2 : Design and development of filters for Analog electronics, Power electronics and Digital circuits for reduction of noise.
CO3 : Design the various types of grounding systems and get familiarized with handling electro static discharge systems
CO4 :Acquire knowledge about testing standards and regulations.

Course Title	**Modern Control Theory (Cluster Elective I –Except EE)**				
Course Code	**16EE6GE1MC**	**Credits**	**03**	**L-T-P-S**	**3-0-0-0**
CIE	**50 Marks(100% weightage)**	**SEE**	**100 Marks(50% weightage)**		

Prerequisites:

Control Systems

Course Description:

This course intends to create state models using physical variables, phase variables and canonical variables that are used to solve state equations. It also deals with the various techniques used to analyse the controllability and observability of a system. Basics about nonlinear systems are also dealt with.

UNIT-I		**8 hours**

State variable analysis and design:
Introduction, concept of state, state variables and state model, state modeling of linear systems, linearization of state equations. State space representation using physical variables and canonical variables

UNIT-II		**8 hours**

Derivation of transfer function from state model, Eigen values, Eigen vectors, generalized Eigen vectors. Solution of state equation ,state transition matrix and its properties, computation using Laplace transformation, power series method, Cayley -Hamilton method

UNIT-III		**7 hours**

Concept of controllability and observability, methods of determining the same, Effect of Pole-Zeros cancellation. Duality.

UNIT-IV		**8 hours**

Pole placement techniques - Stability improvements by state feedback, necessary & sufficient

conditions for arbitrary pole placement, state regulator design, and design of state observer.		
UNIT-V		**8 hours**
Non-Linear systems - Introduction, behavior of non-linear system, common physical non linearity –saturation, friction, backlash, dead zone, relay, multivariable non-linearity. Phase plane method, singular points, stability of nonlinear system, limit cycles, construction of phase trajectories.		
Text books:		
1	Digital control & state variable methods- M.Gopal,THM Hill, 2nd edition, 2003	
2	Control system Engineering- I - J .NagarathM.Gopal, New Age International (P)Ltd, 3rd edition,2003	
Reference books:		
1	**State space Analysis of Control Systems**- Katsuhiko Ogata- Prentice Hall Inc,2007	
2	**Automatic Control Systems-** Benjamin C. Kuo&FaridGolnaraghi , John Wiley & Sons, 8th edition, 2003	
3	**Modern Control Engineering**- Katsuhiko Ogata-PHI 2003	
4	**Modern control systems**-Dorf& Bishop- pearson education,1998	

Course outcomes At the end of the course ,the student will have the ability to
CO1: Create state models using physical variables ,mathematical variables and to solve the state equation
CO2: Identify appropriate techniques to analyze the system for its controllability and observability
CO3: Apply relevant concepts to design systems with state feedback to meet the specifications, Comprehend mathematical representation of nonlinear systems and analysis of a few simple models.

Course Title	ROBOTICS (Cluster Elective I)				
Course Code	16EI6GE1RT	Credits	3	L-T-P-S	3-0-0-0
CIE	50 Marks(100% weightage)	SEE	100 Marks(50% weightage)		

UNIT-1		5 hours
Introduction Objectives, Classification of robots, Major components of robot, definitions: Kinematics, Controls, and actuators. Robot history, types and applications current and future with examples. Fixed and flexible automation		
UNIT-2		**9 hours**
Robot Arm Kinematics Introduction, The direct kinematics problem, Rotation Matrices, Composite rotation Matrix, Rotation matrix about arbitrary axis, Rotation matrix with Euler angle representation, Geometric interpretation of rotation matrix, Homogenous coordinates and transformation matrix, Geometric interpretation of Homogenous transformation matrices, Composite homogenous transformation matrices, Links, Joints, and their parameters, The Denavit - Hartenberg representation, Kinematic equation for manipulator, Other specifications of the locations of the end effectors, Inverse kinematics problem.		
UNIT-3		**7 hours**
Control of Actuators Objective, Motivation, Closed loop control in position servo, Effect of friction and gravity, Adaptive control, Optimal control, Computed torque technique, Transfer function of single joint, Position control for single joint, Brief discussion on performance and stability criteria.		
UNIT-4		**9 hours**
Sensors Sensor characteristics, Position sensors- potentiometers, Encoders, LVDT, Resolvers, Displacement sensor, Velocity sensor- encoders, tachometers, Acceleration sensors, Force and		

Pressure sensors – piezoelectric, force sensing resistor, Torque sensors, Touch and tactile sensor, Proximity sensors-magnetic, optical, ultrasonic, inductive, capacitive, eddy-current proximity sensors.

Hall Effect sensors, Binary sensors, Analog sensors, Force and Torque sensing, Elements of a Wrist sensor.

UNIT-5		**9 hours**

Vision and Processing :

Image acquisition, illumination Techniques, imaging geometry, some basic transformations, perspective transformations. Camera model, camera calibration, stereo imaging, Higher-Level Vision: Segmentation, Edge Linking and Boundary detection, Thresholding. Region-oriented segmentation, Use of motion, Description, Boundary descriptors, Regional descriptors.

Mini project:

Discussion on DC motors with gears, Stepper motor, Servo motor ,Mini projects using Basic sensors, 555 timers, Motors (DC motors with gears, Stepper motor, Servo motor)

A batch of TWO students are required to undertake a mini project to showcase the knowledge acquired during the course of this study.

Example topics :

1. Line follower robot
2. Obstacle avoiding robot
3. Face reorganization algorithm
4. MATLAB simulation or Use of robosim
5. PCB design workshop (Using PCB design software)

Note: Carrying out small models / prototypes of projects are mandated which will carry a 20 percent weight in CIE

Project report has to be submitted with following chapters followed by a presentation

1. Abstract
2. Introduction
3. Block diagram
4. Materials used with detailed specification

5. Design and Design issues in detail 6. Model testing	
Text book	
1	**Robotics – control, sensing, Vision and Intelligence** - K.S.Fu, R.C.Gonzalez, C.S.G. Lee, McGraw Hill, 1987.
2	**Robotic Engineering** - Richard D Klafter, PHI
Reference books:	
1	**Introduction to Robotics Mechanics and control** - John J. Craig, 2nd Edition, Pearson education, 2003

Course outcomes At the end of the course ,the student will have the ability to
CO1: Deduce kinematic equations for a given robot configuration.
CO2: Select actuators and sensors for specified tasks.
CO3: Design and develop manipulators for simple tasks.

Course Title	INDUSTRIAL INTERNET OF THINGS (Cluster Elective I)				
Course Code	16EI6GE1II	Credits	3	L-T-P-S	3-0-0-0
CIE	50 Marks(100% weightage)	SEE	100 Marks(50% weightage)		

Prerequisites:

Control systems and process control

Course Description :

With technological advances in computing power, connectivity and machine learning, the world of manufacturing is expected to undergo a major transformation. Manufacturing will use these advancements and have interconnected smart learning machines improving the productivity and margin to a large extent. This fourth industrial revolution will convert existing manufacturing facilities into smart factories having cyber physical systems communicating with each other and humans in real time taking decentralized and faster decisions. This course is a preamble to the revolution taking you through the Industrial Internet of Things that forms the back bone of cyber physical systems. The various building blocks ofIIoT such as Big data, analytics, and cloud will be discussed along with case studies of integrating all these together.

UNIT-1		12 Hours

Course Overview :

Introduction to IIoT

IIoT in Process Automation : IT + OT

Building Blocks

Sensors & Wireless communication

Big data & Cloud , Edge / Fog Computing

Analytics

Mobility.

Standards in Industry Automation [Industries 4.0]

Learning Activity: Pick any real life problem of significance to the individual or industry or society; Formulate / Explain the problem statement and propose a solution using IIOT & all its building blocks. Individuals shall make a 3-minute 'pitch' for their idea Good ideas shall be considered for project work / prototyping and as a candidate for detailed discussions during subsequent units.		
UNIT-2		**8 Hours**
Architectures & Patterns for IIoT Industrial internet consortium reference architecture Reference architecture model industries 4.0 Solution patterns for IIOT Learning Activity: Define a solution architecture for problems identified in Unit I by explaining the rationale behind their decisions – Group activity.		
UNIT-3		**7 Hours**
Challenges with IIoT. Integrating IT & OT Communication - Connectivity, Collaboration with other infrastructure Information Security Data Management (Size, Type & Reliability) Some known ways / best practices to counter / overcome some of these constraints Learning Activity: Refine the solution architecture for problems identified in Unit II.		
UNIT-4		**4 Hours**
Case Study : IIoT for Smart City Building blocks of smart city – candidate applications for SMART CITY. Study of proposed IIoT based solutions for this application, used cases and workshop Learning Activity : Identifying improvements to the proposed SMART CITY Architecture		

UNIT-5		8 Hours

Case Study : IIoT for Plant Operations

Introduction to plant operations (A day in the refinery / video based sessions)

Today / Current Practice vs IIOT impact, IIOT in process industry,

Typical IIoT applications based on industry (eg. Power vs Water vs Oil & Gas)

Case study : Asset Management for Process Industry using IIoT,

Building blocks behind the solution

An overview of similar applications from the Industry

Learning Activity: A different area of IIoT application in a process plant shall be identified. The groups will carry out research / present case studies related to this application including study of the market landscape, similar offerings etc..

Learning Material provided from YOKOGAWA

Evaluation Criteria:

- Grading for individuals / groups based on

1. Understanding of the concepts covered based on relevance in the outcome of learning activities

2. Self-learning exhibited in the outcome of learning activities

3. Justification of decisions based on the learnings

4. Team behavior wherever applicable

Top two ideas selected by Yokogawa can be taken for project work/internship.

Text book

1	**Designing the Internet of Things -** Adrian McEwen, Hakim Cassimally
2	**Internet of Things: A Hands-On Approach** - Vijay Madisetti, ArshdeepBahga
3	**Internet of things and big data: predict and change the future -** DilinAnand and Anagha P.
4	**The silent intelligence the internet of things** -Daniel Kellmereit and Daniel Obodovski
5	**Enterprise IoT: A definitive Handbook -** Naveen Balani and Rajeev Hathi
6	**The internet of Things**: a look at real world use cases and concerns **-** Lucus Darnell
7	**Internet of things**-Samuel Greengard

Course outcomes At the end of the course ,the student will have the ability to
CO1: Understand the building blocks of an IIOT based solution and try applying it to few common problems
CO2: Use one of the ideas of IIOT and propose a solution architecture for the idea in addition to one reference of IIOT in process Automation.
CO3: Understand the challenges of IIOT as a technology, understand its strength, limitations. Solve constraints through alternatives to refine the group proposal of process Automation.
CO4: Understand concepts of IIOT and apply them in the context of plant operations. Also gain an understanding of the operations of a process plant and identify potential applications.

BMS COLLEGE OF ENGINEERING, BENGALURU-19

(Autonomous College under VTU)

DEPARTMENT OF

ELECTRICAL AND ELECTRONICS ENGINEERING

Scheme VII-VIII Semester

Syllabus VII-VIII Semester

Batch Admitted 2014 onwards

BMS COLLEGE OF ENGINEERING

Bull Temple Road, Bengaluru - 560 019

B.M.S COLLEGE OF ENGINEERING, BENGALURU-19

(Autonomous College under VTU)

INSTITUTE VISION	INSTITUTE MISSION
Promoting prosperity of mankind by augmenting human resource capital through Quality Technical Education & Training	Accomplish excellence in the field of Technical Education through Education, Research and Service needs of society.

DEPARTMENT OF ELECTRICAL & ELECTRONICS ENGINEERING

FOURTH YEAR SYLLABUS BOOK

With effect from A. Y. 2017 – 18

B.M.S COLLEGE OF ENGINEERING, BENGALURU-19

(Autonomous College under VTU)

AY	Academic Year
AAT	Alternative Assessment Tools
BOE	Board of Examiners
BOS	Board of Studies
CBCS	Choice Based Credit System
CGPA	Cumulative Grade Point Averages
CIE	Continuous Internal Evaluation
CO	Course Outcomes
DC	Departmental Core
GC	Group Core
HSS	Humanity and Social Science Courses
IC	Institutional Core
IE	Institutional Elective
IL	Institutional Lab
LTPS	Lecture-Tutorial-Practical-Self Study
NFTE	Not Fit for Technical Education
PCC	Professional Core Courses
PEC	Professional Elective Courses
PEO	Program Educational Objectives
PO	Program Outcomes
SEE	Semester End Examination
SGPA	Semester Grade Point Average
ST	Studio

B.M.S COLLEGE OF ENGINEERING, BENGALURU-19

(Autonomous College under VTU)

DEPARTMENT VISION	DEPARTMENT MISSION
Facilitating the development of competent professionals capable of adapting to the constantly changing global scenario in the field of Electrical Sciences	- Impart quality technical education and encourage research in the field of Electrical Sciences. - Empower every individual to develop as a professional with an ability to apply his/her knowledge and skills to adapt to the evolving technological requirements of society

PROGRAMEDUCATIONAL OBJECTIVES (PEOs)

The PEOs have been evolved in alignment with the vision and mission of the Department. The broad objective of the program isto facilitate the development of competent and successful professionals in tune with modern day technological and societalrequirements. Therefore, after concerted interactions (both formal and informal) with all major constituents including Alumni, Employers, expertsfrom industry and institutions, faculty and students, parents etc., the followingProgram Educational Objectives of the UG course offered by Electrical and Electronics Engineering department have beenarrived at:

The PEOs of the program are as under:

1. PEO-1: Possess successful careers in Electrical Sciences, and allied areas and pursue higher education with a broad knowledge base in Mathematics and Engineering principles.

2. PEO-2: Utilize their technical, analytical, communicative and managerial skills and knowledge for societal progress and enrich them to keep in pace with relevant advancements by engaging themselves in lifelong learning.

3. PEO-3: Exhibit professionalism by displaying competence, leadership, dedication and commitment.

B.M.S COLLEGE OF ENGINEERING, BENGALURU-19

(Autonomous College under VTU)

PO-1	Engineering knowledge: Apply the knowledge of mathematics, science, engineering fundamentals, and an engineering specialization to the solution of complex engineering problems.
PO-2	Problem analysis: Identify, formulate, review research literature, and analyze complex engineering problems reaching substantiated conclusions using first principles of mathematics, natural sciences, and engineering sciences.
PO-3	Design/development of solutions: Design solutions for complex engineering problems and design system components or processes that meet the specified needs with appropriate consideration for the public health and safety, and the cultural, societal, and environmental considerations.
PO-4	Conduct investigations of complex problems : Use research-based knowledge and research methods including design of experiments, analysis and interpretation of data, and synthesis of the information to provide valid conclusions.
PO-5	Modern tool usage: Create, select, and apply appropriate techniques, resources, and modern engineering and IT tools including prediction and modeling to complex engineering activities with an understanding of the limitations.
PO-6	The engineer and society: Apply reasoning informed by the contextual knowledge to assess societal, health, safety, legal and cultural issues and the consequent responsibilities relevant to the professional engineering practice
PO-7	Environment and sustain ability: Understand the impact of the professional engineering solutions in societal and environmental contexts, and demonstrate the knowledge of, and need for sustainable development.
PO-8	Ethics: Apply ethical principles and commit to professional ethics and responsibilities and norms of the engineering practice.
PO-9	Individual and team work: Function effectively as an individual, and as a member or leader in diverse teams, and in multi disciplinary settings.
PO-10	Communication: Communicate effectively on complex engineering activities with the engineering community and with society at large, such as, being able to comprehend and write effective reports and design documentation, make effective presentations, and give and receive clear instructions.

PO-11	Project management and finance: Demonstrate knowledge and understanding of the engineering and management principles and apply these to one's own work, as a member and leader in a team, to manage projects and in multidisciplinary environments.
PO-12	Life-long learning: Recognize the need for, and have the preparation and ability to engage in independent and life-long learning in the broadest context of technological change.

PROGRAM SPECIFIC OUTCOMES

The students will have the ability to:

PSO1: Develop models, analyze and assess the performance of different types of generation, transmission, distribution and protection mechanisms in power systems.

PSO2: Design, develop, analyze and test electrical and electronics systems; deploy control strategies for power electronics related and other applications.

PSO3: Measure, analyze, model and control the behavior of electrical quantities associated with constituents of energy or allied systems.

B.M.S COLLEGE OF ENGINEERING, BENGALURU-19

(Autonomous College under VTU)

Sl. No.	Course Code	Course Title	Credits				
			L	T	P	S	TOTAL
		Department Core					
1	16EE7DCPS2	Power System – II	3	0	1	0	4
2	16EE7DCSGP	Switchgear and Protection	3	0	1	0	4
3	16EE7DCPE2	Power Electronics-II	3	0	1	1	5
		Department Elective – III					
4	16EE7DEHVE	HV Engineering	2	0	1	0	3
	16EE7DEEPQ	Electrical Power Quality	3	0	0	0	3
	16EE7DECED	Control of Electric Drives	2	1	0	0	3
	16EE7DECNE	Computer Communication and Networking for Electrical Engineering Applications	3	0	0	0	3
		Cluster Elective – II					
5	16EE7GESWC	Solar and Wind Energy Conversion Systems	3	0	0	0	3
	16EE7GEPLS	PLC and SCADA	3	0	0	0	3
		Institutional Elective – I					
6	16EE7IE1EM	Electrical Power & Energy Management Systems	3	0	0	0	3
	16EE7IE1MS	Micro and Smart System	3	0	0	0	3
7	16EE7DCPW1	Project for community service	0	0	3	0	3
		Total	18	0	6	1	25

B.M.S COLLEGE OF ENGINEERING, BENGALURU-19

(Autonomous College under VTU)

VIII Semester EEE Scheme

Sl. No.	Course Code	Course Title	Credits				
			L	T	P	S	TOTAL
		Department Core					
1	16EE8DCSEE	Sustainable Practices in Electrical Engineering	2	0	0	1	3
		Group Core					
2	16HS8GCPMF	Project Management and Finance	2	0	0	1	3
3	16HS8GCIPL	Intellectual Property Rights and Cyber law	2	0	0	1	3
4		Institutional Elective –II					
	16MD8IE2OR	Operations Research	3	0	0	0	3
5	16HS8IELSX	HSS Elective Course					
		NSS NCC Yoga Sports Foreign Language Performing Arts	0	0	1	0	1
7	16EE8DCMPJ	Major Project	0	0	10	0	10
8	16EE8DCSMR	Seminar Based On Internship/Industrial Training/Technical Paper	0	0	2	0	2
		Total	9	0	13	3	25

B.M.S COLLEGE OF ENGINEERING, BENGALURU-19

(Autonomous College under VTU)

NOMENCLATURE FOR THE COURSE CODE

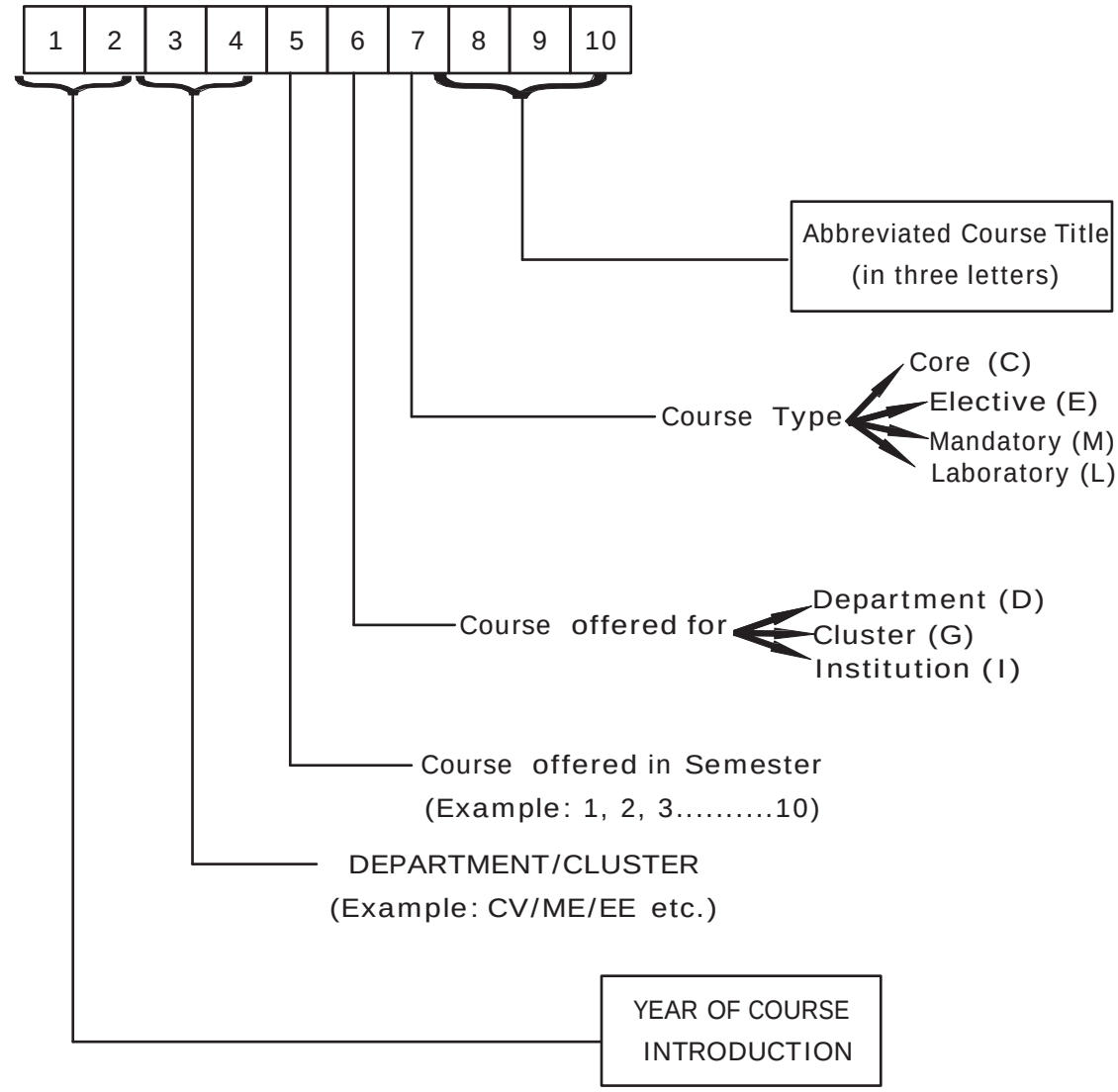

VII SEMESTER

Course Title	POWER SYSTEMS II				
Course Code	16EE6DCPS2	Credits	04	L-T-P-S	3-0-1-0
CIE	50 Marks(100 % weightage)	SEE	100 Marks(50% weightage)		

Prerequisites: Transmission and Distribution, Electrical Energy Systems, Power Systems I

Course Description: This course will cover the various Load flow analysis techniques for the Power System, economic operation of power systems and load frequency control.

Course Outcomes

At the end of the course, the student will have the ability to

CO1: Apply knowledge of Advanced Mathematics and Electrical Engineering concepts to formulate and solve complex power system problems such as load flow, economic dispatch and load frequency control.

CO2: Analyse steady state power system performance based on the load flow model; from the dynamic model of speed governor-turbine system, assess the static performance of the closed loop system.

CO3: Investigate the effect of variation of control parameters such as transformer taps, reactive power etc., on the overall power system behaviour

CO4: Using optimization techniques, economically schedule the load among all the generators in a power system so that the fuel costs are minimized; as load varies throughout the day, determine the savings in cost.

CO5: Write computer programs and/or use standard application software to simulate the power system. Using these modern tools, conduct power flow studies and perform economic dispatch on complex power systems.

UNIT-I 8 hours

Network Formulation, representation of transmission lines and transformers with off nominal turns ratio, Formation of Y_{bus} by inspection. Bus incidence matrix, Primitive network – impedance form and admittance form, Y_{bus} by singular transformation

UNIT-II 8 hours

Power flow equations, Classification of buses, Operating constraints, Data for load flow; Gauss-Seidel Method – Algorithm and flow chart for PQ and PV buses, Acceleration of convergence

UNIT-III 7 hours

Newton-Raphson Method – Algorithm and flow chart for NR method in polar coordinates, Algorithm for Fast Decoupled load flow method, Comparison of Load Flow Methods

UNIT-IV 8 hours

Economic Operation of Power System: Introduction, Performance curves, Economic generation scheduling neglecting losses and generator limits, Economic generation scheduling including generator limits and neglecting losses; Economic Dispatch including transmission losses, Derivation of transmission loss formula, iterative technique for solution of economic dispatch with losses.

UNIT-V 8 hours

Power system control and operating states, digital computer configuration, automaticgeneration control, area control error, Automatic load frequency control, Automatic loadfrequency control of single area systems, Speed governing systems Hydraulic valveactuator, Turbine generator response, Static performance of speed governor, Closing ofALFC loop, Concept of Control Area, Static response of primary ALFC loop.

Text books

1. Computer Methods in Power System Analysis- G. W., Stagg, and A. H.- El-abiad, McGraw Hill International Student Edition. 1968
2. Computer Techniques in Power System Analysis- M. A-Pai, TMH, 2nd edition, 2006.

3. Modern Power System Analysis, IJ Nagrath and DP Kothari, 3rd Edition, Tata McGraw Hill Publications, 2003

4. Power System Analysis, W.D Stevenson, TMH

5.Computer Techniques and Models in Power Systems, K. Uma Rao, I.K International.

Reference books:

1. Computer Aided Power System Analysis,GLKusic, 2nd edition, PHI, 2010
2. Power System Analysis and design, Glover & Sarma, Thomson 3rd Edition
3. Power System Analysis,Hadi Sadat, 3rd edition, Tata McGraw Hill Publications, 2007
4. Electrical Energy Systems Theory, O.J Elgerd, TMH,2008

E-learning:1.

1. NPTEL Course titled: Computer Aided Power System Analysis. Link: http://nptel.ac.in/courses/108107028/

Course Title	SWITCHGEAR AND PROTECTION				
Course Code	16EE7DCSGP	Credits	04	L-T-P-S	3-0-1-0
CIE	50 Marks(100% weightage)	SEE	100 Marks(50% weightage)		

Prerequisites: Power Systems I, Electrical Energy Systems

Course Description: This subject is a core subject and very important for any practicing electrical engineer. The electrical engineer has to deal with many switchgears and protection systems of various elements of power systems. The subject curriculum focuses on the study of fundamentals of power system protection, electromagnetic relays which are important one. It also covers the protection of feeders, transmission lines, transformers, generators and induction motors. The subject deals with the principles of circuit breaking and circuit breaker fundamentals. It also covers the working principle of protective switch gears like CT and PT. The topics covered in the curriculum are chosen in such a way that the students get a very good idea of the underlying principles of switchgear and protection.

Course Outcome:

At the end of the course, the student will have the ability to

CO1: Apply the knowledge to comprehend the need for protective equipment such as fuse and switches.

CO2: Identify the components of the relay and circuit breakers to distinguish the parameters affecting their operation

CO3: Comprehend the working of static relays and comparators.

CO4: Conduct relevant experiments to investigate the performance of switch gear under different situations.

UNIT-I 7 hours

Switches And Fuses: Isolating switch, load breaking switch, Fuse law, cut -off characteristics, Time current characteristics, fuse material, HRC fuse, liquid fuse, Application of fuse.

Protective Relaying: Requirement of Protective Relaying, Zones of protection, primary and backup protection, Essential qualities of Protective Relaying, Classification of Protective Relays.

UNIT-II 7hours

Principles Of Circuit Breakers: Principles of AC Circuit breaking, Principles of DC Circuit breaking, problems encountered in DC breaking, Initiation of arc, maintenance of arc, Arc interruption - high resistance and low resistance interruption, Arc interruption theories – slepian's theory and energy balance theory, Re striking voltage, recovery voltage, Rate of rise of Re striking voltage, Rating of Circuit breakers

Circuits Breakers: Air Circuit breakers – Air break and Air blast Circuit breakers, SF6 breakers, Vacuum Circuit breakers, Construction, principle of operation, Advantages and disadvantages of different types of Circuit breakers.

UNIT-III 7hours

Static Relays: Introduction, Basic construction, Classification, Basic Circuits, Smoothing Circuits, Voltage regulation, square wave Generator, Time delay Circuits, Level Detectors, Summation device, Sampling Circuits, Zero crossing detector, output devices

UNIT-IV 7 hours

Comparators: Replica impedance, Mixing Transformers, General equation of phase and Amplitude, Comparators, Realization of ohm, mho, Impedance and offset impedance characteristics, Duality principle, Static amplifier comparator – Rectifier bridge circulations current type, sampling comparator, static phase comparator coincidence circuits type Rectifier phase comparator

UNIT-V 7hours

Digital Relaying: Merits and Demerits of digital relaying, generalized block diagram of digital relaying, Adaptive relaying, tripping mechanism of relay, different relay algorithms, overcurrent relay coordination in interconnected power system, numerical protection of generator.

Text books:

1. Switchgear & Protection- Sunil S.Rao -Khanna Publishers.
2. Power System Protection & Switchgear- Badriram&ViswaKharma -TMH
3. Fundamentals of Power System protection- Y G. Painthankar and S R Bhide-PHI publication, 2007.
4. Power System Protection, Static Relays with Microprocessor applications"- T.S. MadavaRao, TMH, Second editon, 2004
5. "Protective Relays and Protection" -VanWarrington A. R. and Van C, Vol, I & II Chapman and Hall, 1968

Reference books:

1. A Course in Electrical Power- Soni, Gupta & Bhatnagar- 3rd Edition, Dhanapat Rai publication.
2. Power System Protection & Switchgear- Ravindarnath & Chandra-New age publications.
3. Electrical Power-Dr S. L. Uppal- Khanna Publishers.
4. "Power System Protection"-Patra. S.P. Basu. S.K. Choudhari.S. Oxford, and IBH Publications.
5. Protection and switchgear, Bhavesh Bhalja, R.P Maheshawari, Nilesh G.Chothani.

E-Learning:

1. http://nptel.ac.in/syllabus/108101039/

Course Title	POWER ELECTRONICS -II				
Course Code	16EE7DCPE2	Credits	05	L-T-P-S	3-0-1-1
CIE	50 Marks(100% weightage)	SEE	100 Marks(50% weightage)		

Course Description:

The course deals with understanding the need for power electronic system, its design aspects, operation and analysis of DC – DC switch mode converters, derived converters and resonant converters, design of magnetic components in power electronic systems and microcomputer control of power electronic systems.

Course Outcomes:

At the end of the course, the student will have the ability to

CO1: Analyse the performance of basic DC – DC, derived and resonant converters.

CO2: Carry out simulations of basic DC – DC converters in CCM/DCM mode and derived converters.

CO3: Conduct experiments to validate the performance of basic DC – DC converters in CCM/DCM mode and derived converters.

CO4: Design magnetic components of a circuit using basic concepts of magnetic circuits.

CO5: Apply the concepts of microcomputer control for power electronic system.

UNIT-I 09 hours

DC-DC Switch Mode Converters:

Basic converters: Introduction,Control of DC-DC converter,Steady state performance analysis of Buck Converter, Boost Converter, Buck-Boost Converter in Continuous Conduction Mode (CCM) and Discontinuous Conduction Mode (DCM).

UNIT-II 09 hours

Derived Converters:

Forward converter,Flyback, Cuk Converter (Steady state analysis only)

Resonant converter:

Introduction, Zero voltage and Zero current switchings, Basic resonant circuit concepts.

UNIT-III 08 hours

Design of magnetics

Magnetic concepts: Dissipative Component, Flux and Flux density, Volt-Second Balance.

Inductor: Inductor value, Energy storage, Area product, Window area, Cross – Section area, Design of inductors.

UNIT-IV 07 hours

Microprocessors and Digital ICs for Control of Power Electronics and Drives:

Microcomputer control of Power Electronic systems: Controlling Power Electronic Systems, Microcomputer control of Power Electronic systems, Processor selection, Digital versus Analog control.

Real time control using Microcomputers: Digital input-output, Analog input-output, Interrupt controller, Time processing devices, Communication interface.

UNIT - V 06 hours

Applications of Power Electronics:

Industrial applications residential applications, Electric utility applications: HVDC and interconnection of renewable energy sources and energy storage systems to the utility grid (Block diagram approach and Qualitative analysis only).

Lab Experiments

1. Buck Converter realization
2. Design and Assembly of an Inductor for a specific application.
3. Buck Converter – CCM/DCM operation
4. Simulation of derived converters
5. TL494 control IC for DC – DC converters
6. Boost converter for open loop control

Text books:

1. T1: “Power Electronics – Converters, Applications and Design”, Ned Mohan, Tore M. Undeland and William P Robbins, 3rd Edition, John Wiliey& sons (Unit I, II and V)
2. T2: “Power Electronics – Essentials & Applications”, L Umanand, John Wiliey& sons (Unit III)
3. T3: “Power Electronics and variable frequency drives - Technology and Applications”, Bimal K. Bose, Standard Publishers Distributors. (Unit: IV)

Reference books:

1. Power Electronics, M. D. Singh,, K B Khanchandani, TMH, Second Edition
2. Power Electronics – Circuits, Devices and Applications, Muhammad H Rashid. Prentice - Hall India, Third Edition

E-Learning:

1. NPTEL Lecture on “Power Electronics” http://nptel.ac.in/courses/108101038/
2. NPTEL Lecture on “Power Electronics” http://nptel.ac.in/courses/108105066/

Course Title	HIGH VOLTAGE ENGINEERING (Department Elective - III)				
Course Code	16EE7DEHVE	Credits	03	L-T-P-S	2-0-1-0
CIE	50 Marks(100% weightage)	SEE	100 Marks(50% weightage)		

Pre-requisites: Engineering Physics

Course Description: Upon completion of the course, students will have: knowledge of high voltage applications and general knowledge about high voltage engineering, knowledge of the basic gaseous and liquid dielectrics, their properties and behaviour under high voltage stresses. Students will have knowledge of the high voltage testing equipment and requirements for high voltage testing procedures. Students would also have ability to use the above mentioned knowledge to inspect high voltage equipment and materials used in high voltage applications. They will be able to analyze and understand the electrical insulation condition in different types of applications, to detect malfunctions related to dielectric materials.

Course Outcomes :

At the end of the course, the student will have the ability to

CO1: Apply the knowledge to comprehend Generation of High Voltage

CO2: Apply the knowledge to identify suitable dielectrics in various HV applications.

CO3: Analyse the Breakdown Phenomenon in Insulators

CO4: Analyse the factors affecting HVAC & HVDC measurements

CO5: Conduct experiments on Solids, Liquids (conventional & bio-friendly) to assess the dielectric behavior under power frequency and high frequencies

UNIT-I 5 hours

Introduction To High Voltage Technology And Applications Electric Field Stresses, Control of Electric Stress, Solids, Gas / Vacuum as Insulator, Liquid Dielectrics, Properties, Types and Applications of insulating materials in transformers, Rotating machines, Circuit Breakers, Cable, Power Capacitors and bushings

UNIT-II 6 hours

Breakdown In Gaseous And Liquid Dielectrics

Gases as insulating media, collision process, Ionization process, Townsend's Criteria of Breakdown in Gases, Corona discharge, Paschen's Law and its significance.

Liquid as insulator, Breakdown in pure and impure liquid dielectrics: Suspended particle theory, electronic breakdown, cavity breakdown (bubble's theory) and electro-convection breakdown.

Bio-friendly liquid dielectrics used in practice: Introduction, Advantages and Disadvantages, Necessity of Treatments and Applications

UNIT-III 5 hours

Generation Of HV AC & DC Voltage

HVAC-HV transformer; Need for cascade connection and working of transformer units connected in cascade. Series resonant circuit- principle of operation and advantages. Tesla coil.

HVDC- voltage doubler circuit, Calculation of high voltage regulation, ripple and optimum number of stages for minimum voltage drop.

UNIT-IV 5 hours

Generation of Impulse Voltage

Introduction to standard lightning and switching impulse voltages. Analysis of single stage impulse generator-Expression for Output impulse voltage. Multistage impulse generator, working of Marx impulse Generator. Rating of impulse generator. Components of multistage impulse generator. Generation of switching impulse voltage. Generation of high impulse current.

UNIT-V 5 hours

Measurement of High Voltages

Standard sphere gap measurements of HVAC, HVDC, and Impulse voltages, Factors affecting the measurements. Electrostatic voltmeter-principle, construction, advantages and disadvantages.

Lab Experiments:

1. Measurement of HVAC Breakdown using different electrode configurations a)Sphere Gap b) Point –Plane c) Plane – Plane
2. Measurement of Impulse Breakdown
3. Measurement of HVDC Breakdown using different electrode configurations
   a) Point-Plane
   b) Plane-Plane
4. Measurement of Breakdown of Liquid Dielectric- Mineral Oil, Bio-Friendly Oils
5. Measurement of Dissipation Factor and Relative Permittivity of Liquid Dielectric at
   a) Power Frequency b) High Frequency
6. Tests on Solid Dielectrics –
   a) Breakdown Voltage Measurement
   b) Dissipation Factor and Relative Permittivity at Power Frequency and High Frequencies

Text books:

1. High Voltage Engineering, M.S.Naidu and Kamaraju- 4th Edition, TMH, 2008.
2. High Voltage Engineering Fundamentals, E.Kuffel and W.S. Zaengl, 2nd Edition, Elsevier Press, 2005.

Reference books:

1. High Voltage Engineering, C.L.Wadhwa, New Age International Private limited, 1995.
2. High Voltage Insulation Engineering by RavindraArora, Wolfgang, Mosch, NewAge International (P) Ltd, 1995

E-Learning :

1. https://www.amazon.in/High-Voltage-Engineering...Kuffel-ebook/dp/B008GRKLZ8
2. https://www.amazon.com/High-Voltage-Engineering-Farouk...ebook/.../B00L2EBED...

Course Title	ELECTRICAL POWER QUALITY (Department Elective - III)				
Course Code	16EE7DEEPQ	Credits	03	L-T-P-S	3-0-0-0
CIE	50 Marks(100% weightage)	SEE	100 Marks(50% weightage)		

Course Description: This course covers an overview of modern power systems, need for power quality monitoring, origin of power quality problems, classification of power quality disturbances, harmonic distortion and analysis, types of loads that cause power quality problems, methods of mitigation of PQ problems and instruments used for measuring the power quality. This course would enable the students with sufficient awareness about the various issues affecting power quality as well as techniques available to improve the quality of power.

Course Outcomes:

At the end of the course students will have the ability to:

CO1: Explain the issues and concerns of power quality, classify ,sketch and identify various power quality phenomena normal as well as abnormal, define several standards related to power quality, the effect of distributed generation ,origin of power quality variations, consequences and effect of frequency variations, effects of harmonic distortions, explain the working of instruments and mitigation methods used for PQ problems.

CO2: Apply the concepts to evaluate power system quantities for systems under specified sinusoidal and non sinusoidal conditions of operation.

CO3: Analyze behaviour of systems and interpret data presented through case studies for power quality issues and suggest suitable remedial measures.

CO4: Independently and/or in a group design experiments, model ,simulate, measure using specialized equipment, study, collate information/data ,on loads that cause power quality problems in different field set-ups such as domestic /bulk consumers of electricity.

CO5: Make effective technical presentations and reports on the work carried out and communicate effectively to an audience.

UNIT-I 05 hours

Modern view of power systems, Power Quality: Interest in power quality, definition of power quality, events and variation, Power quality monitoring. Overview of power quality standards, compatibility between equipment and supply, normal events, abnormal events, Distributed generation, impact of distributed generation on current and voltage quality, tripping of generator units. Power Quality issues and concerns of the country.

UNIT-II 05hours

Origin of power quality variations: Voltage frequency variations, power balance, power-frequency control, spinning reserve, choice of power set-point,sharing of load, behavior consequences of frequency variations, time deviation of clocks, variations in motor speed, variations in flux, risk of under frequency tripping, rate of change of frequency, measurement examples

UNIT-III 06hours

Classification of power quality issues: transients, long duration voltage variations, short duration voltage variations, voltage imbalance, waveform distortion, consequences of waveform distortion, harmonic distortion, voltage versus current distortion, harmonics versus transients, power system quantities under non sinusoidal conditions, active reactive and apparent power, displacement power factor and true power factor, harmonic phase sequences, triplen harmonics, harmonic indices, total harmonic distortion and total demand distortion.

UNIT-IV 04 hours

Effects of harmonic distortion: Effect on capacitors, Effect on transformers, impact on motors, Harmonic sources from commercial loads, single phase power supplies, fluorescent lighting, adjustable -speed drives for HVAC and elevators, Wiring and grounding, reasons for grounding, typical wiring and grounding problems, solutions to a few wiring and grounding problems.

UNIT-V 06hours

Loads that cause power quality problems, modeling and simulation of nonlinear loads, Classification of Mitigation Techniques for Power Quality Problems: Passive and Active power filters (qualitative approach only). Power quality measurement equipment: types, wiring and grounding testers, multi meters, digital cameras, oscilloscopes, disturbance analyzers spectrum and harmonic analyzers, flicker meters, smart power quality monitors, transducer requirements.

Text books:

1. Signal Processing of Power Quality Disturbances, Math H. Bollen, Irene Gu, , Wiley-IEEE Press, July 2006.
2. Electrical Power Systems Quality, Roger C. Dugan, Surya Santoso, Mark F. Mc Granaghan, H. Wayne Beaty, Paperback, ,Mc Graw Hill, Professional, Technology, 7th June 2012 .
3. Power Quality: Problems and Mitigation Techniques, Bhim Singh, Ambrish Chandra, Kamal Al-Haddad, First Edition, © 2015 John Wiley & Sons, Ltd. Published by John Wiley & Sons, Ltd,2015.

Reference books:

1.Power Quality, C. Sankaran, by CRC Press, December 21, 2001.
2. Power Quality Enhancement Using Custom Power Devices, by Arindam Ghosh , Gerard Ledwich, Paperback – 2009.
3. Power Quality in Power Systems and Electrical Machines ,Second Edition, Ewald Fuchs and Mohammad A. S. Masoum, Elsevier Inc,2015.

E-Learning:

1. http://nptel.ac.in/courses/108106025/ Power quality in power distribution systems, Dr. Mahesh Kumar,Professor Department of Electrical Engineering Indian Institute of Technology Madras IIT Madras.

Course Title	CONTROL OF ELECTRICAL DRIVES (Department Elective III)				
Course Code	16EE7DECED	Credits	03	L-T-P-S	2-1-0-0
CIE	50 Marks(100% weightage)	SEE	100 Marks(50% weightage)		

Course Description: The aim of this course is to equip students with knowledge of variable-speed drives and motion control systems which are used in many industrial processes such as in conveyors, machine tools, pumps, compressors, mining drives, electric vehicles, ship propulsion, wind energy systems, air-craft actuators, servo drives and automation systems, to name a few. The course stresses the basic understanding of characteristic of machines driven from appropriate power electronic converters and controllers. The steady-state behavior of such drives will be primarily covered and some dynamic issues of drive representation and control system design will also be introduced.

Course Outcomes

CO1: Apply the fundamental concept to comprehend the working of industrial Drives and dynamics.

CO2: Apply the knowledge to select appropriate motor for the specified application to meet customer requirements.

CO3 : Analyse the performance of dc motor drives for various operating condition

CO4: Analyse the performance of induction motor during unbalanced condition, control of induction motors with the help of power electronic circuits.

UNIT-I 7 hours

An Introduction To Electrical Drives & Its Dynamics

Electrical drives. Advantages of electrical drives. Parts of electrical drives, choice of electrical drives, status of dc and ac drives, Dynamics of electrical drives, Fundamental torque equation, speed torque conventions and multi quadrant operation. Equivalent values of drive parameters, components of low torques, nature and classification of load torques, steady state stability.

UNIT-II 7 hours

Dc Motor Drives

Starting braking, single phase fully controlled rectifier, control of separately excited dc motor, Single-phase half controlled rectifier control of separately excited dc motor.

Three phase fully controlled rectifier - control of separately excited dc motor, three phase half controlled rectifier - control of separately excited dc motor, multi-quadrant operation of separately excited dc motor fed from fully controlled rectifier. Control of dc series motor. chopper controlled dc drives separately excited dc motor and series motor.

UNIT-III 6 hours

Unbalanced Analysis Of Induction Motor

Operation with unbalanced source voltage and single phasing, operation with unbalanced rotor impedances, analysis of induction motor fed from non-sinusoidal voltage supply, starting methods of the induction motor.

UNIT-IV 6 hours

Control Of Induction Motor Drives

Stator voltage control, V/f control, Slip regulation, speed control of staticKramer's drive, current control, VSI fed induction motor, CSI fed induction motor.

UNIT-V 6 hours

Special Machines And Industrial Applications

Brushless DC motor, stepper motor and variable reluctance motor drives.

Industrial application: cement mills, rolling mills, textile mills, paper mills.

Text books:

1. Fundamentals of Electrical Drives, G.K Dubey, Narosa publishing house, 2nd Edition, 2002.
2. M.H Rashid, “Power Electronics, Circuits, Devices & Applications” Third Edition, PHI, New Delhi 2004

Reference books:

1. Electrical Drives, N.K De and P.K. Sen- PHI, 2009
2. Electric Motor Drives, Modeling, Analysis and Control, R.Krishnan, PHI,2008
3. Power Electronics, Devices, Circuits and Industrial Applications, V.R. Moorthi, “Oxford University Press, 2005
4. Power electronics and variable frequency drives technology and applications ,Edited Bimal K.BOSE

E-Learning:

1. http://nptel.ac.in/courses/108108077/(NPTEL Lecture by Prof.Gopakumar,IISC)
2. http://nptel.ac.in/courses/108104011/(NPTEL Lecture by Prof.S.P.DAS, IIT Kanpur)

Course Title	COMPUTER COMMUNICATION AND NETWORKING FOR ELECTRICAL ENGINEERING APPLICATIONS (Department Elective – III)				
Course Code	16EE7DECNE	Credits	03	L-T-P-S	3-0-0-0
CIE	50 Marks(100% weightage)	SEE	100 Marks(50% weightage)		

Prerequisites: Boolean logic and number systems, fundamentals of programming.

Course Description: Students will be exposed to the concept of communications and networking includingdominant networking models, services provided by Data Link layer and associated protocols, error detection and correction, LAN, MAN, Ethernet, IEEE standards for WLAN and WPAN, IPv4 and IPv6 logical addressing concepts, Transport layer protocols (UDP and TCP), Application layer and the services provided by Application layer (Domain Name Space, Electronic mail, WWW and HTTP).

Course Outcomes:

By the end of the course, the students will be able to:

CO1. Acquire knowledge about network models, devices ,principles of communication , current technology and associated IEEE communication standards for wired and wireless communication.

CO2. Analyse the services provided by various layers of network models, protocols of Data Link Layer, Transport layer.

Co3. Implement network protocols for a given network topology using modern tools.

CO4. Apply communication and networking concepts for electrical engineering

UNIT-I 8hours

Introduction - Data communications, Networks, Internet, Protocols and standards Network models: OSI model, Layers in OSI model, TCP/IP protocol suite, addressing.

UNIT-II 10 hours

Data Link Layer - Error detection and correction: Types of errors

Data Link control: Framing, Flow and error control, Noiseless channels:Stop and wait protocol, Noisy channels: Stop and Wait Automatic Repeat Request, Go-Back-N ARQ.

Multiple Access control: Random access-pure ALOHA, slotted ALOHA, CSMA, CSMA/CD, CSMA/CA, Controlled access: reservation, polling token passing, Switched Ethernet, Gigabit & 10 Gigabit Ethernet, Power over Ethernet (PoE)

UNIT-III 06 hours

LAN/MAN standards- LAN/MAN standards: IEEE 802.11, Bluetooth. Introduction toWPAN standards and protocols: IEEE 802.15.4, ZigBee.

UNIT-IV 06 hours

Network Layer

Logical addressing: IPv4 format and addresses, IPv6 – comparison to IPv4, advantages and transition.

Internetworking and connecting Devices: Introduction and functions

UNIT-V 09 hours

Transport Layer: Process to process delivery, UDP, TCP, Congestion and congestion control, QOS.

Application layer: Name space- Domain Name Space, Electronic mail, WWW and HTTP.

Application of IoT to smart grids – benefits and challenges, Industrial Ethernet – principles and applications

Text books:

1. Data communication and networking– Behrouz A. Forouzan, 4th Ed, TMH 2006.
2. Computer networks – Andrew. S. Tannenbaum

Reference books:

1. William Stallings, Data and Computer Communications, Tenth edition, Pearson, 2014

Course Title	SOLAR AND WIND ENERGY CONVERSION SYSTEMS (Cluster Elective II)				
Course Code	16EE7GESWC	Credits	03	L-T-P-S	3-0-0-0
CIE	50 Marks(100% weightage)	SEE	100 Marks(50% weightage)		

Prerequisites: Physics, Basic Electrical, Basic Electronics

Course Description: This course introduces current strategies and plan of Government of India in renewable energy sector and gives an insight into energy management and conservation opportunities.

The course brings awareness to explore present needs of the society for sustainable development. The focus of this course is to cover fundamental aspects of solar energy and wind energy. The course also emphasises on techniques of conversion from the two most important resources: Solar and Wind to electrical energy

Course Outcomes:

CO1: Understand current strategies, plan and policies of GOI in Renewable energy usage and awareness about sustainable development.

CO2: Understand the methods and opportunities for energy conservation in Industrial and Domestic sectors and its impact on the environment.

CO3: Apply the knowledge of mathematics and physics to analyse the solar radiation, its measurement also to estimate wind power.

CO4: Explain the Energy Conversion with respect to Solar- Thermal, PV and Wind applications.

UNIT-I 7 hours

Energy conservation

Energy, man and Environment, Law of conservation of energy, Age of Renewable alternatives, changing energy consumption trends, National energy strategies and National energy plan (most recent strategies and plans of GOI to be discussed), Renewable energy policies (India in focus)Key aspects of- Energy Management, Energy Audit, Energy conservation opportunities, Energy for Sustainable development.

UNIT-II 8 hours

Basics of Solar Energy

Extra terrestrial and terrestrial Solar radiation, Solar constant, Sun-earth angles-definitions and their representation, solar radiation geometry, estimation of Average solar radiation, estimation of solar radiation on horizontal and tilted surfaces, units of solar power and energy, Measurement of solar radiation-EpplyPyranometer, pyrheliometer-Angstrom compensation, Abbot Silver disk

UNIT-III 8 Hours

Solar Thermal Electric Conversion

Thermal to electrical conversion systems-flat plate and concentrating type collectors, central receiver system, Energy balance equation and collector efficiency, Applications of solar thermal systems – solar pond electric power plant, solar still, solar dryer, solar furnace, solar greenhouse – types and advantages

UNIT-IV 8 Hours

Photovoltaic conversion and applications

Fundamentals of solar cell-,p-n junction photodiode, conversion efficiency and power output, types of solar cells,

Equivalent circuit of PV cell, I-V and P-V characteristics, fill factor, load matching and optimization for maximum power.

Solar –PV applications – Battery charging, street lighting, solar water pumping, Grid connection solar PV systems. Advantages and disadvantages PV solar energy conversion

UNIT-V 8 Hours

Wind Energy and Applications

Introduction to wind energy, Nature and origin of wind, wind energy quantum, wind power density, power in a wind stream, Maximum Power, wind turbine efficiency, Power of wind turbine for a given wind velocity site selection, forces on the blades of propeller, height from ground , wind velocity duration curve, Energy pattern factor, wind power duration characteristic, wind speeds for turbines.

Wind turbine generator- number of blades, horizontal axis and vertical axis types, operation of wind turbines, P-V characteristics of wind turbine generator, power curve and power duration curve of wind turbine units, wind to electric energy conversion systems- CSCF, VSCF, nearly constant frequency of grid, simplified scheme for grid connection, and Energy storage requirements with wind energy systems.

Text books:

1. Non-conventional Energy Sources G.D. Rai, Khanna Publishers 4 th edition 2011.
2. Energy Technology, S. Rao and Dr. B.B. Parulekar, Khanna Publishers 3rd edition 2007

Reference books:

1. Solar Energy: Fundamentals, Design, Modeling and Applications, G.N. Tiwari, Narosa publications
2. Wind and Solar Power Systems: Design, Analysis, and Operation,Mukund R. Patel, Second Edition, CRC press, 2005
3. Solar Cells: Operating Principle, system application and Technology Martin A. green, Prentice Hall, New Delhi, 2008
4. Solar Photovoltaics: Chetan Singh Solanki , PHI Learning; 3 edition , 2015

E-Learning:

1. https://books.google.co.in/books?isbn=3319149415
2. https://books.google.co.in/books?isbn=0070260648
3. https://books.google.co.in/books?isbn=1139461559

Course Title	PLC AND SCADA (Cluster Elective II)				
Course Code	16EE7GEPLS	Credits	03	L-T-P-S	3-0-0-0
CIE	50 Marks(100% weightage)	SEE	100 Marks(50% weightage)		

Prerequisites: None

Course Description: This course develops the functional design, hardware configuration, programming and application of Programmable Logic Controllers (PLC). The design and programming of control circuits using examples from industrial applications will be emphasized. The application of PLC's in process automation will be examined. An overview of functional hardware design will be included. The equipment used will be small and medium sized PLC's with both digital and analog capabilities.

Course Outcome

CO1: Memories the basic concepts of use of computers in process control through data loggers, DAS, SCADA, DDC and DCS. ·

CO2: Understanding and implementation of ladder programming for various applications using PLCs.

CO3: Illustrate the various parts of distributed control systems and its application in industry. ·

CO4: Classify various industrial communication protocols used in PLC's and DCS network.

UNIT-I 7 hours

Computers In Process Control

Data loggers – Data Acquisition Systems (DAS) –Introduction to Direct Digital Control (DDC) – Introduction to Supervisory Control and Data Acquisition Systems (SCADA) and Distributed Control System

UNIT-II 8 hours

Programmable Logic Controller (PLC) Basics

Review of relay based systems. Introduction and importance of PLC, Types of PLC, Basic

architecture of CPU of PLC, Basic wiring diagram of PLC, PLC operation and various standards, input/output modules- power supplies and isolators. General PLC programming procedures-programming on-off inputs/ outputs-Auxiliary Commands and functions- PLC Basic Functions- register.

UNIT-III 8hours

Programming Of Plc Using Timers And Counters

Introduction to programming standards of PLC, basic relay instruction, timer and counter instructions, Related programming and practice examples.

UNIT-IV 8 hours

Advanced Instructions In PLC

PLC intermediate functions: Arithmetic functions - comparison functions, logic functions – Data handling instructions. PLC input-output and PLC sequencer instructions, PLC program flow instructions, Designing of I/O system, creating ladder diagram from process control description.

UNIT-V 8hours

Introduction To DCS

Distributed Control Systems (DCS): Definition – merits and demerits, Local Control Unit (LCU) architecture – hierarchical system structure functional level, database organization, field stations, intermediate stations, central computer station, monitoring and command facilities.

Text books:

1. John.W. Webb, Ronald A Reis, “Programmable Logic Controllers - Principles and Applications”, Prentice Hall Inc., New Jersey, 2003.
2. B.G. Liptak, “Instrument Engineers Hand, Process control and Optimization”, CRC Press- Radnor, Pennsylvania, 2006

3. M.Chidambaram, “Computer Control of Process,” Narosa Publishing, New Delhi, 2003
4. Gary Dunning “introduction to Programmable logic controllers” 3 edition, CENGAGE learning

Reference books:

1. B.G. Liptak, “Process software and digital networks,” CRC press, Florida-2003.
2. Curtis D. Johnson “Process control instrumentation technology,” Prentice Hall, New Jersey 2006.
3. Krishna Kant, “Computer-Based Industrial Control,“ PHI, New Delhi, 2004
4. Frank D. Petruzella, “Programmable Logic Controllers”, McGraw Hill, New York, 2004.

E-Learning :

1. http://www.nptel.ac.in/courses/108106022/8
2. http://nptel.ac.in/courses/108105062/

Course Title	Electrical Power and Energy Management Systems (Institutional Elective- I)				
Course Code	16EE7IE1EM	Credits	03	L-T-P-S	3-0-0-0
CIE	50 Marks(100% weightage)	SEE	100 Marks(50% weightage)		

Pre-requisites: Basic electrical engineering

Course Description: Objective: Energy studies and Energy management concerns the issues regarding optimal use of our present and future energy sources. This course is intended to address economic and environmental problems due to energy use, by considering the technical, economic and social factors that affect the demand for energy. On completing the course, one would have a good knowledge of how economic analysis can help understanding problems related to energy supply and use; be able to analyze alternative energy policy options in terms of benefits and costs; have a good understanding of energy markets; be able to analyze the risks associated with energy options. The student will also have acquired the skills needed to structure, analyse and evaluate energy related problems.

Course Outcomes:

At the end of the course, the student will have the ability to

CO1: Apply the knowledge and try to solve the problems of power crisis in India by analyzing different load availability with respect to requirements and demands.

CO2: Select and apply different methods of tariffs used in practice and to motivate and apply the energy conservation methods in various sectors of energy use.

CO3: Analyze various energy auditing methods to conserve energy in various sectors

Co4: Analyze different load curves of various energy sectors and apply load control methods for optimal use of electricity.

UNIT-I 07 hours

Introduction: Introduction: Electrical Energy demand, Electrical Energy growth in India, Growth of Electrical Energy consumption, Electrical Energy losses, Electrical Energy

sources, conventional and non-conventional energy sources, power crisis in India, future Energy demand in India.

UNIT-II 08 hours

Load and load curves & Tariff: Load and Load curves: Energy requirements, Maximum Demand, Group Diversity factor, Peak Diversity factor, type of load, load factor, capacity factor, utilization factor, base load and peak load plant. Numerical. Tariff: Objective, General Tariff forms, Types of Tariff, Numerical.

UNIT-III 08 hours

Energy Conservation: Introduction, motivation for Energy conservation, principles of Energy conservation, Energy conservation planning, Energy conservation in Industries, Energy conservation in Generation, Transmission and Distribution, Energy conservation in household and commercial sectors, Transport and Agriculture.

UNIT-IV 09 hours

Energy Audit: Aim of Energy Audit, Energy flow diagram, Energy management team, Considerations in implementing Energy conservation programs, Periodic progress review, Instruments for Energy Audit, Energy Audit for illumination system, Energy Audit for heating, Ventilation, Air-condition systems, Energy Audit for compressed air systems and Energy Audit of Buildings

UNIT-V 07 hours

Demand Side Management: Scope of DSM, Concept of Demand Side Management (Evolution of DSM), Load management as a DSM Strategy, Applications of Load control, End use Energy Conservation, Tariff options for DSM, DSM & Environment.

Text books:

1. Generation of Electrical Energy: B.R.Gupta, Chand & Company, 5th Edition

E-Learning :

1. https://books.google.co.in/books?isbn=0881735434, Wayne C. Turner, Steve Doty – 2007
2. https://books.google.co.in/books?isbn=1315356619, Frank Kreith, D. Yogi Goswami– 2016

Course Title	MICRO & SMART SYSTEM (Institutional elective –I)				
Course Code	16EE7IE1MS	Credits	03	L-T-P-S	3-0-0-0
CIE	50 Marks(100% weightage)	SEE	100 Marks(50% weightage)		

Pre-requisites: Knowledge of physics, chemistry and basic knowledge on materials

Course Description: Micro and smart system technologies have immense application potential in many fields. In the coming decades, scientists and engineers would be required to design and develop such systems for varied applications. It is essential then that graduating engineers be exposed to the underlying science and technology. This course gives an overview about the concepts, technologies, design and application of various microsystems.

Course Outcomes

At the end of the course, the student will have the ability to

Co1: Develop and understand the concept about micro systems, their working and applications as sensors and actuators.

Co2: Analyze the complexity of fabrication process and micro machining technologies.

Co3: Understand the design of different electronic circuits and components used in micro sensors & actuators.

Co4: Develop knowledge about integration, interconnection & packaging of microsystems leading to a suitable societal engineering solution.

UNIT-I 7 hours

Introduction: Introduction to micro systems and scaling effects in micro systems. Scaling in mechanical domain, scaling in electrostatic, magnetic and thermal domain, scaling in fluids and scaling in biochemical phenomenon.

UNIT-II 8 hours

Micro sensors & Actuators: Systems and smart materials; Silicon capacitive

accelerometers, Piezoresistive pressure sensors, Conductometric gas sensors, Electrostatic comb drive, Portable blood analyzer, Magnetic Micro Relay, Smart Materials and Systems

UNIT-III 9 hours

Micromachining technologies: Silicon as a material for micromachining, thin film deposition, lithography, etching, Silicon Micromachining, Special materials for micro systems, Advanced processes for micro fabrications

UNIT-IV 8 hours

Overview of modeling of Microsystems: Electronics circuits and control for micro and smart systems; semiconductor devices, Electronic amplifiers, Practical signal conditioning circuits for Microsystems, Circuits for conditioning sensed signals.

UNIT-V 7 hours

Integration for micro and smart systems: Integration for micro systems and microelectronics and micro systems packaging, case studies of integrated micro systems.

Text books:

1. Micro and Smart Systems: G.K.Ananthasuresh, K.J.Vinoy, S.Gopalakrishnan, K.N.Bhat, V.K.Aatre, Wiley India Publishers 1st Edition 2010

Reference books:

1. Tai-Rai-Su, MEMS ansd Micro Systems
2. Melton- O – Ring, Thin Film Process
3. MEMS Lecture Series (CDS) by ShanthiramKal

E-Learning:

1. NPTEL Lectures on Micro and Smart Systems, IISc Bangalore.

Course Title	PROJECT FOR COMMUNITY SERVICE				
Course Code	16EE7DCPW1	Credits	03	L-T-P-S	0-0-3-0
CIE	50 Marks(100% weightage)	SEE	100 Marks(50% weightage)		

Course Outcomes

At the end of the course, the student will have the ability to

CO1: Do a survey and formulate a problem identified.

CO2: Apply a suitable engineering/IT tool for modeling/data interpretation/analysis, conduct experiments leading to a logical solution of the proposed problem.

CO3: Compare the proposed solution with other available alternatives.

CO4: Communicate effectively to a diverse audience trough presentationsand develop technical reports and publications

VIII SEMESTER

Course Title	SUSTAINABLE PRACTICES IN ELECTRICAL ENGINEERING				
Course Code	16EE8DCSEE	Credits	03	L-T-P-S	2-0-0-1
CIE	50 Marks(100% weightage)	SEE	100 Marks(50% weightage)		

Course Description:

Electrical Engineering Graduates should have Design and Application knowledge on Low Voltage Distribution Systems to sustain availability of electrical power. This course emphasizes on related fundamentals, design & development of LV Distribution products plus their integration in a system. It covers solving of practical problems that need to be addressed for design, selection of equipment / switch-gears, commissioning & testing, and control mechanism to formulate a robust system that would deliver safe and uninterrupted electrical power at optimum cost.

Course Outcomes:

At the end of the course the student would be able to,

CO1: Comprehend the design and challenges in LV distribution systems, selection of various switch gears for LV distribution, Robust design Issues in Switch Gears & Protection of LV distribution, Various Quality control methodsfor robust products.

CO2: Analyzethe performance of electrical systems that exist for societal use for safety, sustainability, energy efficiency, quality, economics and reliability.

CO3: Apply ethical knowledge /standard practices to assess the extent of adherence to regulations in electrical products.

CO4: Make effective reports/presentations on various aspects of the studies carried out.

UNIT-I 04 Hours

Building sustainability -Sustaining Self & Business - Capability & Deliverables, Sustaining Society- LCA ; Energy efficiency ; ROHS ; WEEE

UNIT-II 05 hours

Sustainable LV distribution systems- Range, functionality, and integration of products

into system, mechanical equivalence of electrical power, Basics of Electrical Contacts for Break-Make-Withstand currents.

UNIT-III 05 hours

Robust design to ensure sustainability -Make products Safe & Provide products for Safety, Avoid unwanted interruptions, selectivity / discrimination, Domain & design tools knowledge, Sustaining Society- LCA ; Energy efficiency ; ROHS ; WEEE understand & use design language, Enclosures for safe operation .

UNIT-IV 05 hours

Considerations for robust design- Safety of people & installation, Regulations - BIS IEC UL, Assurance of life, user confidence Hazards, Failure Modes &Mitigants.

UNIT-V 05 hours

Testing validation and controls for robust design -Quality, Reliability, DFSS, Poka-Yoke, Design Margin & Trade-offs., Evaluation, certification, third party recognition, field performance, Parts, processes, performance, qms, internal & external defect parts per minute.

Text books:

1. Lectures and Uploaded pre-work material by Course Designer
2. Electrical Contacts: Principles and Applications, Second Edition,Paul G. Slade,by CRC Press, December 17, 2013.

Reference books:

1. Lectures delivered by Course Designer.
2. Strategy for Sustainability: A Business Manifesto by Adam Werbach ,Harvard Business Press; 6.1.2009 edition (July 6, 2009).

E- learning:

1. www.ge.com.

Course Title	PROJECT MANAGEMENT AND FINANCE				
Course Code	16HS8GCPMF	Credits	03	L-T-P-S	2-0-0-1
CIE	50 Marks(100% weightage)	SEE	100 Marks(50% weightage)		

Pre-requisites: Personality development course, soft skills

Course Description:

This course trains in the basic principles of project management, including concepts from the initiating, planning, executing, monitoring & controlling, and closing process groups. Introduces fundamentals from the project management knowledge areas such as integration, scope, time, cost, quality, human resources, communications, risk, procurement, and stakeholder management.

Provides students with the opportunity to apply project management principles to real-world situations with the use of simulations and case studies. Also, offers additional training in project management principles, tools, techniques, and outcomes.

This course offers a comprehensive approach to understand the importance of financial management in managing projects and programs.

Course Outcomes

At the end of the course, the student will have the ability to

CO1: Apply the Knowledge of project management principles and to implement project management methodologies required for successful project completion

CO2: Develop Ethical principles in project planning and execution as a team and documentation in project implementation.

CO3: Identify and Apply finance aspects for project implantation in time.

CO4: Use modern tools to simulate their respective projects and case studies and investigate the behaviour under various operating conditions.

UNIT-I 5 hours

Concepts of Project Management - Concepts of project , Categories of project , Project life cycle phases, Project management concepts, Tools and techniques for project management, The project manager, Basic education for a project manager, Roles and responsibilities of project manager ,Project manager as profession, Summary

UNIT-II 5 hours

Establishing the Project- Scope, Time , Cost and performance goals, Feasibility report, Financing Arrangements, Preparation of cost estimates, Finalization of project implementation schedule, Evaluation of the project profitability, Appointing a project manager, Fixing the Zero date, Summary

UNIT-III 5 hours

Organizing Human Resources and Contracting- Delegation , Project managers authority, Project organization , Accountability in Project Execution , Contracts , R's of contracting, Tendering and Selection of Contractors, Team building, Summary

UNIT-IV 5 hours

Organizing Systems and Procedures for Project Implementation -Working of systems, Design of Systems, Project work system design , Work breakdown structure, Project execution plan, Project procedure manual, Project control system, Planning, Scheduling and Monitoring, Monitoring contracts, Project diary , Summary.

UNIT-V 6 hours

Financing of Projects - Capital structure, Menu of financing , Internal accruals , Equity capital, Preference capital , Debentures (or bonds) , Methods of offering term loans , Working capital advances, Miscellaneous sources , Raising venture capital, Project financing structures, Financial closure , Financial institutions ,Summary.

Text books:

1. Project Management – S Choudary, Tata McGRAW Hill Publishing Company Limited
2. Projects- Planning , Analysis , Selection, Financing ,Implementation and Review –Dr. Prasanna Chandra McGRAW Hill Publishing Company Limited

Reference books:

1. Project Management – David I Cleland – Mcgraw Hill International edition
2. Project Management – Gopalakrishnan – Mcmillan India Ltd
3. Project Management – harry – Maylor- Peason Publication

E-resources:

1. Nptel lecture on Introduction to project management by prof. Arun Kanda
   https://www.youtube.com/watch?v=5pwc2DYlKQU

Course Title	INTELLECTUAL PROPERTYRIGHTS AND CYBER LAW				
Course Code	16HS8GCIPL	Credits	03	L-T-P-S	2-0-0-1
CIE	50 Marks(100% weightage)	SEE	100 Marks(50% weightage)		

Course Description:

This course develops contextual knowledge to access societal health, safety, legal and consequent responsibilities relevant to the professional engineering practice. The course also emphasizes the laws governing the protection of individuals, organizations, institutions, society and countries against infringements on social, emotional and economic lines. It also gives awareness about the punishments to wrong doings by misuse of cyber space on information technology platform.

Course Outcomes

At the end of the course, the student will have the ability to

CO1: Ability to understand and commit to professional ethics and responsibilities to obtain Intellectual property Rights like Patents, Copyright & Trademarks

CO2: Understand the impact of Patents, Copyright & Trademarks and demonstrate the knowledge of Cyber Law for the societal and environmental context

CO3: Ability to use IPRs and Cyber Law to access societal, health, safety & Cultural issues

CO4: Ability to work in multiple teams to effectively communicate IP & Cyber Law.

UNIT-I 4 hours

Basic principles of IP laws &Patents: Introduction, Concept of property, Constitutional aspects of IP, Evolution of the patent system in UK, US and India, Basis for protection, Origin and meaning of the term patent, Objective of a patent law, principles underlying the patent law in India, the legislative provisions regulating patents, Non–patentableinventions.

UNIT-II 7 hours

Procedure for obtaining patent: Submission of application, Filing provisional and complete specification, Examination of the application, advertisement of the acceptance, opposition, Grant and sealing of patent, Term of the patent, compulsory license.

Provisional and complete specification: Definition of Specification, Kinds of specification, provisional specification, complete specification, Claims, Conditions for amendment.

Rights conferred on a patentee: Patent rights, Exception and limitations, Duties of a Patentee.

Transfer of patent: Forms of transfer of Patent rights, Assignment, kinds of assignment, License, kinds of license, Rights conferred on a licensee, Transmission of patent by operation of law.

Infringement of patents: Construction of claims and infringement, patents held to be infringed, patents held to be not infringed.

Action for Infringement: Where a suit is to be instituted, procedure followed in the suit, Onus of establishment infringement, Defence by the defendant, The Relief's, Injunction, Damages or account of profits, patent agents, patent drafting, database searching, and Case studies

UNIT-III 6 hours

Copy Right: Meaning and characteristics of copy right, Indian copy right law, requirement of copy right, Illustrations copy right in literary work, Musical work, Artistic work, work of architecture, Cinematograph film, sound recording.

Author and Ownership of copy right: Ownership of copy right, Contract of service, Contract for service, rights conferred by copy right, terms of copy right, license of copy right.

Infringement of copy right: Acts which constitute infringement, general principle, direct and indirect evidence of copying, Acts not constituting infringements, Infringements in literary, dramatic and musical works, Remedies against infringement of copy right, Case studies

Trade Marks: Introduction, Statutory authorities, procedure of registration of trademarks, rights conferred by registration of trademarks, licensing in trade mark, infringement of trade mark and action against infringement

UNIT-IV 4 hours

Cyber Law: An introduction, Definition, why cyber law in India, Evolving cyber law practices- for corporates, privacy in indian cyber space. Terrorism & Cyber Crime. Cyber theft and Indian telegraph act, Cyber Stalking

UNIT-V 4 hours

Indian Cyber law: Protecting Indian children online, Spam, contempt in cyber space, Indian consumers & cyber space, E-courts of India.

Text books:

1. Dr. T Rama krishna, "Basic principles and acquisition of Intellectual Property Rights", CIPRA, NSLIU-2005.
2. Dr.B.L.Wadehhra, "Intellectual Property Law Hand book", Universal Law Publishing Co.Ltd., 2002.
3. Cyber law-The Indian perspective by Pavan Duggal, 2009 Edition.

Reference books:

1. Dr.T Rama krishna, "Ownership and Enforcement of Intellectual Property Rights", CIPRA, NSLIU-2005.
2. "Intellectual Property Law(Bare Act with short comments)",UniversalLaw Publishing Co.Ltd. 2007.
3. "The Trade marks Act 1999(Bare Act with short comments)",Universal Law Publishing Co.Ltd.,2005.

Course Title	OPERATIONS RESEARCH (Institutional Elective- II)				
Course Code	16MD8IE2OR	Credits	03	L-T-P-S	3-0-0-0
CIE	50 Marks(100% weightage)	SEE	100 Marks(50% weightage)		

Pre-requisites: Matrix computations, Statistics and Probability

Course Description: Course Objective: To acquaint the students with quantitative methods and different techniques for effective decision making; model formulation and applications that is used in solving business decision problems in various environments. The course includes linear programing, transportation, assignment problems, CPM/PERT techniques, Game theory.

Course Outcomes :

At the end of the course, the student will have the ability to

CO1: Formulate a real-world problem as a mathematical programming model.

CO2: Formulate and solve transportation models by applying cost cutting strategies.

CO3: Formulate and solve assignment models and travelling salesmen problems.

CO4: Construct a project network and apply program evaluation review technique and critical path management.

CO5: Employ Game theory for strategic decision making

UNIT-I 09 hours

INTRODUCTION: Evolution, definition, scope of OR, application areas of OR, steps (phases) in OR study, characteristics and limitations of OR, models used in OR, Linear Programming Problems (LPP) - Formulation of LPP-Graphical solution. Use of slack, surplus and artificial variables, Canonical and Standard forms, Solution of LPPs using Simplex method, Big- M method.

UNIT-II 07 hours

TRANSPORTATION PROBLEM: Formulation of transportation problem, types, initial basic feasible solution using North-West Corner method, least cost method, Vogel approximation method, Degeneracy in transportation problems, optimal solutions by MODI method.

UNIT-III 07 hours

ASSIGNMENT PROBLEM- Formulation, types, Hungarian method for assignment problem, Unbalanced assignment problem, application to maximization cases and travelling salesmen problem

UNIT-IV 09 hours

PERT-CPM TECHNIQUES: Introduction, network construction-AON & AOA diagrams, Fulkerson's rule for numbering the events, Critical path method to find the expected completion time of a project, floats; PERT for finding expected duration of an activity and project, determining the probability of completing a project. Predicting the completion time of project; crashing of simple projects.

UNIT-V 07 hours

GAME THEORY: Formulation of games, types, solution of games with saddle point, Solution of games without saddle point, 2x2 games without saddle point, graphical method of solving mixed strategy games, dominance rule for solving mixed strategy games.

Text books:

1. S.D. Sharma-Operations Research, Kedarnath Ramanath & Co.2002
2. R. Panneerselvam-Operations Research, second edition, PHI Learning Private Limited 2011.
3. Richard Bronson, GovindasamiNaadimuthu: Schaumn Outline series-second edition, Tata McGraw Hill edition 2004, Eleventh reprint 2011.

Reference Books:

1. Hiller and Liberman -Introduction to Operations Research, Ninth edition McGraw Hill Publications
2. Hamdy A Taha H A- Operations Research, eighth edition, Pearson Prentice Hall.
3. Kanti Swarup, P K Gupta, Man Mohan, Operations Research, Sultan Chand & Sons, 2010.

E-Learning:

1. https://books.google.co.in/books?isbn=8131711048, Taha – 2008.
2. https://books.google.co.in/books?isbn=8121902819 D S Hira – 2008.
3. https://books.google.co.in/books?isbn=8131700003, A. M. Natarajan, P. Balasubramani – 2006.

Course Title	MAJOR PROJECT				
Course Code	16EE8DCMPJ	Credits	10	L-T-P-S	0-0-10-0
CIE	100 Marks(100% weightage)	SEE	100 Marks(100% weightage)		

Course Outcomes

CO1: Ability to research literature, and formulate a complex engineering problem.

CO2: Apply the fundamental knowledge of mathematics, science and engineering principles in design of solutions of system components.

CO3: Identify, Select, Apply a suitable engineering/IT tool in modeling/data interpretation/analytical studies, conduct experiments leading to a logical solution.

CO4: Design a system/ system component/process, build it and test its functioning as a solution to a complex engineering problem.

CO5: Communicate effectively to a diverse audience and develop technical reports and publications

Course Title	SEMINAR				
Course Code	16EE8DCSMR	Credits	02	L-T-P-S	0-0-2-0
CIE	50 Marks(100% weightage)	SEE	50 Marks(100% weightage)		

Course Outcomes

CO1: Analyze and interpret data for complex systems.

CO2: Select and apply modern engineering tools

CO3: Communicate Effectively to an Audience, and design documentation (written graphical and visual forms)

CO4: Engage in independent learning

ಬಿ.ಎಂ.ಎಸ್. ತಾಂತ್ರಿಕ ಮಹಾವಿದ್ಯಾಲಯ, ಬೆಂಗಳೂರು

(ಸ್ವಾಯತ್ತ ವಿದ್ಯಾ ಸಂಸ್ಥೆ)

ಬುಲ್ ಟೆಂಪಲ್ ರಸ್ತೆ, ಬೆಂಗಳೂರು – ೫೬೦ ೦೧೯

BMS COLLEGE OF ENGINEERING

(Autonomous college under VTU)

BENGALURU-560019

ELECTRICAL & ELECTRONICS ENGINEERING

Scheme & syllabus for

III & IV Semester

Academic year: 2015-2016

BMS COLLEGE OF ENGINEERING, BENGALURU

Autonomous College under VTU

VISION	MISSION
Promoting Prosperity of mankind by augmenting human resource capital through Quality Technical Education & Training	Accomplish excellence in the field of Technical Education through Education, Research and Service needs of society

DEPARTMENT OF ELECTRICAL & ELECTRONICS ENGINEERING

SECOND YEAR SYLLABUS BOOK

With effect from A. Y. 2015 – 16

Table of Contents

Content	Page No.
Abbreviations	**4**
Vision-Mission of the Department	**5**
Program Educational Objectives	**5**
Program Outcomes	**6**
Scheme of Instructions for III-IV Semester	**7**
Course Code Nomenclature	**8**
Syllabus for Advanced Engineering Mathematics	**10**
Syllabus for Linear Circuit Analysis	**14**
Syllabus for Analog Microelectronics	**17**
Syllabus for Digital Electronics	**21**
Syllabus for Field Theory	**24**
Syllabus for Simulation Lab I	**26**
Syllabus for Discrete Mathematics and Probability	**28**
Syllabus for Analog Integrated Circuits	**32**
Syllabus for Microcontrollers	**35**
Syllabus for Control Systems	**38**
Syllabus for Signals and Systems	**40**
Syllabus for Simulation Lab II	**42**
Syllabus for Mathematics I	**43**
Syllabus for Mathematics II	**46**
Assessment	**49**

AY	Academic Year
AAT	Alternative Assessment Tools
BOE	Board of Examiners
BOS	Board of Studies
CBCS	Choice Based Credit System
CGPA	Cumulative Grade Point Averages
CIE	Continuous Internal Evaluation
CO	Course Outcomes
DC	Departmental Core
GC	Group Core
HSS	Humanity and Social Science Courses
IC	Institutional Core
IE	Institutional Elective
IL	Institutional Lab
LTPS	Lecture-Tutorial-Practical-Self Study
NFTE	Not Fit for Technical Education
PCC	Professional Core Courses
PEC	Professional Elective Courses
PEO	Program Educational Objectives
PO	Program Outcomes
SEE	Semester End Examination
SGPA	Semester Grade Point Average
ST	Studio

DEPARTMENT VISION	DEPARTMENT MISSION
Facilitating the development of competent professionals capable of adapting to the constantly changing global scenario in the field of Electrical Sciences	• Impart quality technical education and encourage research in the field of Electrical Sciences • Empower every individual to develop as a professional with an ability to apply his/her knowledge and skills to adapt to the evolving technological requirements of society

PROGRAM EDUCATIONAL OBJECTIVES (PEOs)

The PEOs have been evolved in alignment with the vision and mission of the Department. The broad objective of the program is to facilitate the development of competent and successful professionals in tune with modern day technological and societal requirements.
Therefore, after concerted interactions (both formal and informal) with all major constituents including Alumni, Employers, experts from industry and institutions, faculty and students, parents etc., the following Program Educational Objectives of the UG course offered by Electrical and Electronics Engineering department have been arrived at:

The PEOs of the program is as under:

1. **PEO-1:** Possess successful careers in Electrical Sciences, and allied areas and pursue higher education with a broad knowledge base in Mathematics and Engineering principles.

2. **PEO-2:** Utilize their technical, analytical, communicative and managerial skills and knowledge for societal progress and enrich them to keep in pace with relevant advancements by engaging themselves in lifelong learning.

3. **PEO-3:** Exhibit professionalism by displaying competence, leadership, dedication and commitment.

Program Outcomes

Program outcomes (POs), are attributes acquired by the students at the time of graduation. The POs given in the table below, ensure that the POs are aligned to the Graduate Attributes (GAs) specified by National Board of Accreditation (NBA). These attributes are measured at the time of graduation and hence computed every year for outgoing batch. The POs are addressed and attained through the Course Outcomes (COs) of various courses of the curriculum.

PO-1	Apply the knowledge of mathematics, science, and engineering principles to the solution of electrical and allied engineering problems.
PO-2	Formulate and analyze complex engineering problems using first principles of mathematics, physical and engineering sciences.
PO-3	Design solutions for complex engineering problems, and design system components that meet specific societal needs.
PO-4	Design and conduct experiments and analyze and interpret data for complex systems.
PO-5	Select and apply appropriate modern engineering tools to complex engineering activities with an understanding of the limitations.
PO-6	Apply reasoning informed by contextual knowledge to assess societal health, safety, legal and consequent responsibilities relevant to the professional engineering practice.
PO-7	Understand the impact of the professional engineering solutions in societal and environmental contexts, and demonstrate the knowledge of, and need for sustainable development.
PO-8	Understand ethical principles and social issues.
PO-9	Function effectively as an individual, and as a member or leader in diverse teams to accomplish a common goal.
PO-10	Communicate effectively with diverse audiences and able to write effective reports and design documentation.
PO-11	Demonstrate knowledge and understanding of the engineering and management principles and apply these to one's own work, as a member and leader in a team, to manage projects in multi-disciplinary environments.
PO-12	Recognize the need to engage in independent and lifelong learning in the context of technological change.

III Semester Scheme

Sl. No.	Course Code	Course Title	Credits				
			L	T	P	S	Total
1	15MA3GCAEM	Advanced Engineering Mathematics	3	1	0	0	4
2	15ES3GCLCA	Linear Circuit Analysis	3	1	0	0	4
3	15ES3GCAMC	Analog Microelectronics	3	0	1	2	6
4	15ES3GCDEC	Digital Electronics	3	0	1	2	6
5	15EE3DCFTH	Field Theory	3	1	0	0	4
6	15EE3DCSL1	Simulation Lab –I	0	0	1	0	1
Total			15	3	3	4	25

IV Semester Scheme

Sl. No.	Course Code	Course Title	Credits				
			L	T	P	S	Total
1	15MA4GCDMP	Discrete Mathematics and Probability	3	1	0	0	4
2	15ES4GCAIC	Analog Integrated Circuits	3	0	1	2	6
3	15ES4GCMCS	Microcontrollers	3	0	1	2	6
4	15ES4GCCST	Control Systems	3	1	0	0	4
5	15ES4GCSAS	Signals and Systems	3	1	0	0	4
6	15EE4DCSL2	Simulation Lab -II	0	0	1	0	1
Total			15	3	3	4	25

NOMENCLATURE FOR THE COURSE CODE

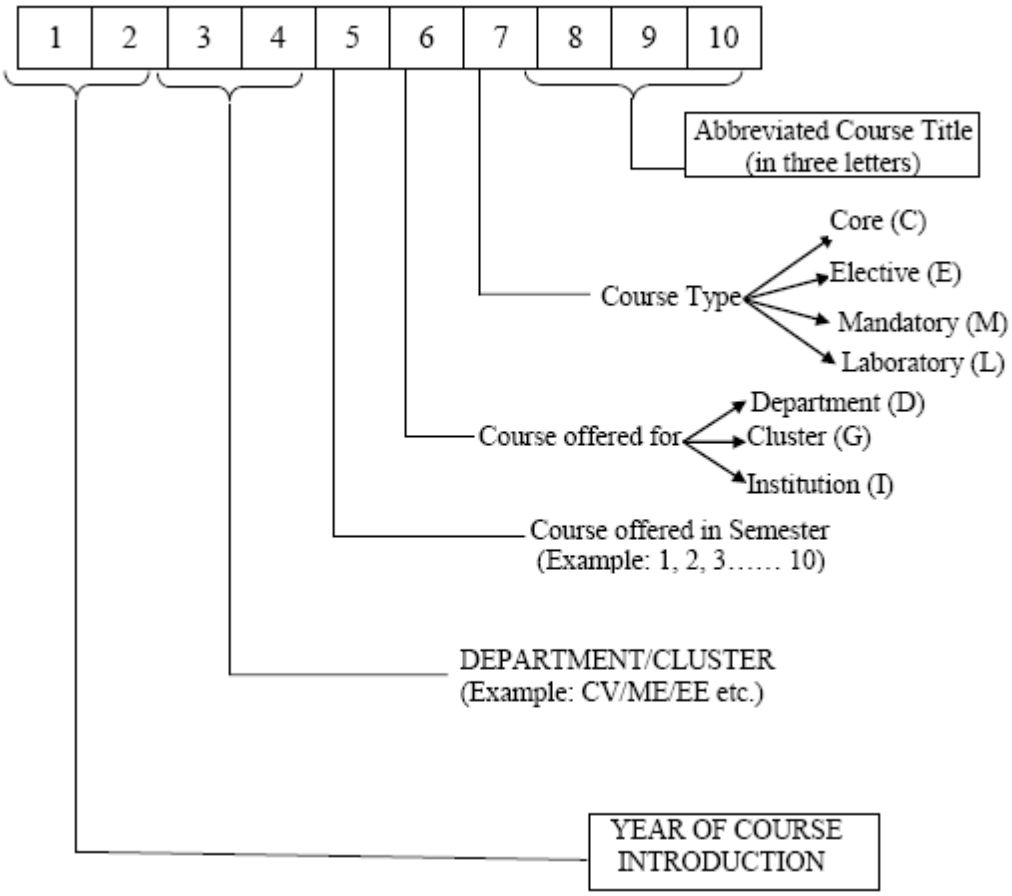

III Semester Syllabus

Course Title	ADVANCED ENGINEERING MATHEMATICS (Common to EC, TE, EE, IT, ML)				
Course Code	15MA3GCAEM	Credits	4	L-T-P-S	3:1:0:0
CIE	50 Marks(100% weightage)	SEE	100 Marks(50% weightage)		

Prerequisites:
Trigonometric formulas, methods of differentiation, methods of integration, partial derivatives, matrices, Fourier Series, Fourier Transforms

UNIT-I		9 hours

MATRICES: Introduction: Elementary row transformations, Echelon form of a matrix, rank of a matrix by elementary row transformations. Consistency of system of linear equations and solution.
Solution of a system of non-homogenous linear algebraic equations: Gauss elimination method, LU decomposition method, Gauss-Seidel method. Eigen values and eigenvectors of matrices. Reduction of a matrix to diagonal form. **(7L+2T)**
Suggested Reading: Inverse of a matrix using Gauss-Jordan method. Largest Eigen value and corresponding eigenvector using Rayleigh power method.

UNIT-II		10hours

NUMERICAL METHODS:
Solution of algebraic and transcendental equations: Newton-Raphson method.
Finite Differences and interpolation: Forward differences, backward differences. Newton-Gregory forward interpolation formula, Newton-Gregory backward interpolation formula, Lagrange's interpolation formula, Lagrange's inverse interpolation. Numerical integration: Simpson's $1/3^{rd}$, $3/8^{th}$ rule, Weddle's rule. Numerical solution of ordinary differential equations: Euler's modified method, Runge-Kutta method of fourth order**.** **(8L+2T)**

Suggested Reading: Milne's method to solve ordinary differential equations. Solution of simultaneous differential equations by Runge-Kutta fourth order method.

UNIT-III		10hours

PARTIAL DIFFERENTIAL EQUATIONS:
Formation of Partial differential equations-elimination of arbitrary constants, elimination of arbitrary functions. Equations of first order- Solution of the linear equation $P\,p + Q\,q = R$ **(**Lagrange's partial differential equation).
Applications: One-dimensional heat equation and wave equation (without proof), Transmission

line-telegraph equations, various possible solutions of these by the method of separation of variables.

(7L+3T)

Suggested Reading: Direct integration method, method of separation of variables, D'Alembert's solution of wave equation.

UNIT-IV		**9 hours**

COMPLEX ANALYSIS 1:

Function of a complex variable, limits, continuity and differentiability of a complex valued function. Analytic functions, properties of analytic functions, Cauchy-Riemann equations in Cartesian and polar form, construction of analytic functions by Milne-Thomson method.

Conformal mapping-Transformations: $w = z^2$ and $w = z + \frac{a^2}{z}$ $(z \neq 0)$.Bilinear transformations.

(7L+2T)

Suggested Reading: Standard transformations $w = c + z,\ w = cz,\ w = 1/z$, properties of bilinear transformations.

UNIT-V		**9 hours**

COMPLEX ANALYSIS 2:

Complex integration: Line integral, Problems on line integral, Cauchy's theorem, Cauchy's integral formula.

Complex series: Taylor's series, Maclaurin's series and Laurent's series (without proof).

Zeros, Poles and Residues: Residue theorem (without proof). Evaluation of real definite integrals using residues.

(7L+3T)

Suggested Reading: Power series, radius of convergence. Removable and essential singularities, improper real integrals with singular points on real axis.

Applications: Use of harmonic function to a heat transfer problem. Analyzing AC circuits, Current in a field- effect transistor.

Mathematics Lab

- Solution of system of algebraic equations using Gauss Seidel method.
- LU decomposition of matrices.
- Eigen values and eigenvectors of matrices.
- Largest Eigen value, smallest Eigen value and corresponding eigenvectors of a matrix.

• Solution of algebraic and transcendental equations using Newton- Raphson method. • Numerical integration. • Numerical solution of ordinary differential equations	
Text books:	
1.	Higher Engineering Mathematics, B.S. Grewal, 43rd edition, 2014, Khann a Publishers.
2.	Advanced Engineering Mathematics, 5th edition, 2011, by Dennis G.Zill and Cullen, Jones and Bartlett India Pvt. Ltd.
Reference books:	
1.	Higher Engineering Mathematics, B.V. Ramana, 2007, Tata Mc. Graw Hill.
2.	Advanced Engineering Mathematics, Erwin Kreyszig, 10th edition Vol.1 and Vol.2, 2014, Wiley-India.
3.	Numerical Methods for Scientific and Engineering Computation. M.K. Jain, S.R.K Iyengar, R.K. Jain, 6th edition, 2010, New Age International (P) Limited Publishers
E Books:	
1.	Engineering Mathematics, K. A. Stroud, Dexter J. Booth, Industrial Press, 2001 http://books.google.co.in/books/about/Engineering_Mathematics.html?id=FZncL-xB8dEC&redir_esc=y.
2.	Advanced Engineering Mathematics, P. V. O'Neil, 5th Indian reprint, 2009, Cengage learning India Pvt. Ltd.
3.	http://ocw.mit.edu/courses/mathematics/ (online course material)
Moocs:	
1.	http://nptel .ac.in/courses.php?disciplineId=111
2.	https://www.khanacademy.org/
3.	https://www.class-central.com/subject/math (MOOCS) (4)E-learning: www.vtu.ac.in
4.	E-learning: www.vtu.ac.in

Course outcomes At the end of the course ,the student will have the ability to
CO-1: Obtain numerical solution a system of algebraic equations, algebraic and transcendental equations and ordinary differential equations.
CO-2: Formulate boundary value problems involving one dimensional heat and wave equation
CO-3: Solve partial differential equations with appropriate boundary conditions using the method of separation of variables
CO-4: Construct analytic functions and simple conformal mappings.
CO-5: Evaluate real and complex integrals using the calculus of residues.

Course Title	LINEAR CIRCUIT ANALYSIS				
Course Code	15ES3GCLCA	Credits	4	L-T-P-S	3-1-0-0
CIE	50 Marks(100% weightage)	SEE	100 Marks(50% weightage)		

Prerequisites:
Basic Electrical Engineering, Engineering Mathematics- I & II

UNIT-1		5+2 hours

Basic Concepts:

Practical sources, Source transformations, Network reduction using Star Delta transformation, Loop and node analysis with linearly dependent and independent sources for DC and AC networks, Concepts of supernode and supermesh.

UNIT-2		8+3hours

Network Topology:

Graph of a network, Concept of tree and co-tree, incidence matrix, tie-set, tie-set & cut- set schedules, Formulation of equilibrium equations, Principle of duality.

Resonant Circuits: Series and parallel resonance, frequency response of series and Parallel circuits, Q factor, Bandwidth

UNIT-3		7+3 hours

Network Theorems:

Superposition, Reciprocity, Milliman's, Thevenin's and Norton's theorems; Maximum Power transfer theorem

UNIT-4		10+3 hours

Transient behavior and initial conditions:

Behavior of circuit elements under switching condition and their representation, evaluation of initial and final conditions in RL,RC and RLC circuits

Laplace Transformation & Applications:

Review of Laplace transforms, Waveform Synthesis, initial and final value theorems, step, ramp and impulse responses, convolution theorem, solution of simple R-L,R-C,R-L-C networks for AC and DC excitations using Laplace transforms.

UNIT-5		6+1 hours

Two port network parameters and State Variable analysis:

Definition of z, y, h and transmission parameters, modeling with these parameters, relationship between parameters sets. Writing state equations and solution using Laplace transforms.

Text books:	
1.	"Network Analysis", M.E.Van Valkenburg, PHI/PearsonEducation,3rd Edition. Reprint2002.
2.	"Network and systems",Roy Choudhury,2nd edition,2006 re-print, New Age International Publications
3.	Theory and Problems of Electric Circuits, Schaum`s Series, 2nd Edition Mc Graw Hill
Reference books:	
1.	"Engineering Circuit Analysis",Hayt, Kemmerly and Durbin, TMH 6th 2002
2.	"Network analysis and Synthesis", Franklin F. Kuo, Wiley Edition
3.	"Analysis of Linear Systems",David K.Cheng,Narosa Publishing House,11th reprint,2002
4.	"Circuits",Bruce Carlson, Thomson Learning,2000.Reprint2002
E Books:	
1.	Nptel.ac.in/courses/108105065- Networks signals and systems by Prof T.K. Basu, IIT Kharagpur
2.	Nptel.ac.in/courses/108102042- Circuit Theory by Prof Dutta Roy S.C, IIT Delhi
3.	www.electrodiction.com/circuit-theory
Moocs:	
1.	http://elearning.vtu.ac.in/06ES34.html
2.	https://www.coursera.org/course/circuits

Course outcomes At the end of the course ,the student will have the ability to
CO-1: Formulate equations based on physical laws and analyze the steady state behavior of complex electric networks
CO-2: Apply the knowledge of mathematics and graph theory to the solution of complex electrical networks
CO-3: Apply mathematical and analytical techniques to analyze transient behavior of networks
CO-4: Analyze networks based on two port networks and state variables

Course Title	ANALOG MICROELECTRONICS				
Course Code	15ES3GCAMC	Credits	6	L-T-P-S	3-0-1-2
CIE	50 Marks(100% weightage)	SEE	100 Marks(50% weightage)		

Prerequisites: Elements of Electronics Engineering		
UNIT-1		**7 hours**
Diodes: Introduction **Limiting and clamping circuits** -Limiter circuits, The Clamped capacitor or DC restorer. **Bipolar Junction Transistor (BJTs)**:Introduction, **Single stage BJT amplifiers** -The basic structure , characterizing BJT Amplifiers, The common emitter amplifier **Frequency Response of the CE amplifier-**The 3 frequency bands, The high frequency response The low frequency response.		
UNIT-2		**8 hours**
MOSFETS: Introduction ,**Device structure and physical operation** -Device structure, operation with no gate voltage, creating a channel for current flow, Applying a small VDs, Operation as VDs is increased, Derivation of the id-V_{DS} relationship, The P- Channel MOSFET, Complementary MOS or CMOS, operating the MOS transistor in the subthreshold region . **Current voltage Characteristics –** Circuit symbol, id-V_{DS} characteristics, characteristics of the P-Channel MOSFET **MOSFET Circuits at DC** **The MOSFET as an amplifier and as a switch** - Large - signal operation , Graphical derivation of the transfer characteristic, operation as a switch, operation as a linear amplifier. **Biasing in MOS amplifier circuits-**Biasing by fixing V_{GS}, Biasing by fixing V_G and connecting a resistor in the source , Biasing using a drain to gate feedback resistor, biasing using a current source.		
UNIT-3		**7 hours**
Small - signal operation and models of MOSFETs-The DC bias point, the signal current in the drain terminal ,the voltage gain, separating dc analysis and the signal analysis, small signal equivalent circuit models, the transconductance g_m, the T equivalent circuit model. **Single stage MOS amplifiers -** The basic structure, characterizing amplifiers, The CS amplifier,		

The CS amplifier with a source resistance.
IC Biasing - Current sources, current mirror and current steering circuits-
The basic MOSFET current source, MOS current steering circuits

Current mirror circuit with improved performance - The Wilson current mirror

UNIT-4		**7 hours**

Feedback:-
Introduction ,the general feedback structure, S**ome properties of negative feedback**-Gain density, bandwidth extension, noise reduction, reduction in nonlinear distortion, **The four basic feedback topologies-** Voltage amplifiers, current amplifiers, transconductance amplifiers , practical feedback circuits for current series and voltage series feedback

UNIT-5		**7 hours**

Power Amplifiers:
Introduction, The classification of output stages.
C**lass A output stage** - transfer characteristic, signal waveforms, power dissipation, power conversion efficiency, transformer coupled power amplifiers, class B transformer coupled amplifier
Class B output stage - Circuit operation , transfer characteristic, power conversion efficiency, power dissipation, reducing crossover distortion, single supply operation
Class AB output stage - Circuit operation, output resistance
Power BJTs – Junction temperature, thermal resistance, power dissipation versus temperature, transistor case and heat sink

Laboratory Experiment List:

Diode and Transistor as a switch, Zener diode characteristics and Zener as regulator, Diode clipping circuits- Single/Double ended, Diode clamping Circuits - positive clamping/negative clamping, BJT as RC coupled amplifier, BJT as RC phase shift oscillator, Crystal Oscillator, Power Amplifier, Open ended experiments.

This course shall include an assessment based on the **QEEE Phase IV** on 'Fundamentals of Small Signal Analysis' taught by Prof. Shanthi Pavan, IIT Madras.

Text books:

1.	Microelectronic Circuits-Theory and applications by Adel S. Sedra and Kenneth C.Smith, Fifth Edition , (Oxford International Student Edition)
2.	Electronic Devices and Circuit Theory-Robert L.Boylestad and Louis Nashelsky (Pearson Education)

Reference books:	
1.	Electronic Devices and Circuits- Millman and Halkias, TMH
E Books:	
1.	www.pyroelectro.com/edu/analog
2.	http://freevideolectures.com/Course/3020/Circuits-for-Analog-System-Design
Moocs:	
1.	https://www.mooc-list.com/course/electronic-systems-and-digital-electronics-uninettuno?static=true
2.	http://ocw.mit.edu/courses/electrical-engineering-and-computer-science/6-012-microelectronic-devices-and-circuits-spring-2009/
3.	Introductory Analog Electronics Laboratory (Spring 2007) by MIT Open Courseware | Reviews and Ratings

Course outcomes

At the end of the course ,the student will have the ability to

CO-1: Define, understand and explain the structure, V-I characteristics, working and applications of analog electronic devices like diodes, Bipolar Junction Transistors(BJTs) and MOSFETs

CO-2: Apply the knowledge of KVL and KCL to obtain voltage /current/waveform at different points in analog electronic circuits such as diode clippers, clampers, amplifiers using BJTs and MOSFETs, current sources, current mirrors, power amplifiers, feedback amplifiers

CO-3: Analyze analog electronic circuits such as diode clippers, clampers, amplifiers using BJTs and MOSFETs, current sources, current mirrors, power amplifiers, feedback amplifiers etc. to obtain voltage /current/waveform at different points for given specifications

CO-4: Design analog electronic circuits such as diode clippers, clampers, amplifiers using BJTs and MOSFETs, current sources, current mirrors, power amplifiers, feedback amplifiers for given specifications.

CO-5: Conduct experiments using analog electronic components and electronic instruments to function as switch, regulator, clippers, clampers, small signal amplifiers, oscillators, power amplifiers

CO-6: Engage in self-study/independent study to formulate, design, implement, analyze and demonstrate an application using analog electronic components through an open ended

experiment
CO-7: Engage in self-study/independent study to submit a seminar report and make an effective presentation on topics related to the course (e-waste management, www.deity.gov.in, Comparative study of components, preparing the specifications of components, verifying the data sheets, applications of analog electronics)

Course Title	DIGITAL ELECTRONICS				
Course Code	15ES3GCDEC	Credits	6	L-T-P-S	3-0-1-2
CIE	50 Marks(100% weightage)	SEE	100 Marks(50% weightage)		

Prerequisites:
Elements of Electronics Engineering

UNIT-1		8 hours

Introduction: Review of Boolean algebra, logic gates.

Simplification of Boolean functions : Three Variable K – Maps, Four Variable K – Maps, The Tabulation Method, Determination of Prime Implicants, Selection of prime implicants.

Combinational Logic Circuits: Introduction, Carry Look Ahead Adder, Parallel Adder, Decimal Adder Code conversion, , Magnitude Comparator, Decoders, Multiplexers, Read Only memories (ROM), Programmable Logic Arrays(PLAs).

UNIT-2		7 hours

Flip-Flops:
The Basic Flip-flop circuit, Clocked Flip-flops, Triggering of Flip-flops: Master Slave Flip-Flops, Edge Triggered Flip Flops, Characteristic Equations.

UNIT-3		8 hours

Sequential Logic Circuits:
Shift Registers, Ripple Counters, Design of Synchronous Counters

UNIT-4		8 hours

Sequential systems:
Analysis of Clocked Sequential circuits, State Reduction and Assignment, Design Procedure, Design with State Equations

UNIT-5		8 hours

Logic Families: Characteristic of Digital ICs, Transistor – Transistor Logic, Complementary MOS (CMOS) Logic, Comparison of TTL and CMOS families

Laboratory Experiment List:

Applications of IC 7483 (Adders, Subtractors and Comparators), Multiplexers (using Gates and IC) and their applications, Decoders/DeMultiplexers (using Gates and IC) and their applications, BCD to Decimal decoder using 7-segment display, Verification of MSJK Flip-flop (using Gates and IC 7476), Asynchronous counters (using ICs 7476,7490,7493), Synchronous Counters (using ICs 7476, 74190/74192), Shift registers and their applications (using ICs 7476, 7495)

This course shall include assessments based on the QEEE Phase IV lecture on 'Nitty Gritty of Logi Gates to Processor Design' by Prof. Ashok Jhunjhunwala, IIT Madras (based on the topics Logic Gates to Execution Unit Design, ALU design)

Text books:	
1	Digital Logic and Computer Design- M. Morris Mano, Prentice Hall – Pearson Education
2	Fundamental of Logic Design- Charles Roth Jr., Thomas Learning
Reference books:	
1	Digital Principles and Design- Donald Givone, Tata McGraw Hill
2	Digital Logic Applications and principles- John Yarbrough, Pearson Education
E Books:	
1.	http://www.free-engineering-books.com/2014/11/digital-fundamentals-by-thomas-l-floyd.html
2.	https://books.google.co.in/books/about/Fundamentals_of_Digital_Circuits.html?id=BOVkrtiLUcEC
Moocs:	
1.	http://freevideolectures.com/blog/2010/11/130-nptel-iit-online-courses/
2.	http://freevideolectures.com/Course/2319/Digital-Systems-Design#
3.	www. Pyroelectrom.com/edu
4.	Nptel.ac.in/courses/117106086
5.	http://nptel.ac.in/courses/117105080
6.	Digital Circuits and SystemsYouTube - S. Srinivasan, IIT Madras
7.	Digital Integrated Circuits YouTube –Amitava Dasgupta, IIT Madras

Course outcomes At the end of the course ,the student will have the ability to
CO-1: Understand, define and explain the fundamental concepts of Digital circuits
CO-2: Applythe knowledge of digital circuit concepts (Boolean Algebra, K-Maps and Quine-Mc Clusky method) to optimize a digital circuit for the given parameter (number of gates, time delay, power consumption, cost)
CO-3: Analyze digital circuits and arrive at suitable conclusions
CO-4: Design a digital circuit for given specifications
CO-5: Conduct experiments using digital ICs for a given application/problem statement
CO-6: Engage in self-study to formulate, design, implement, analyze and demonstrate an application of digital electronic circuits through an open ended experiment
CO-7: Engage in self-study to deliver a seminar on topics related to the course accompanied by a seminar report (www.deity.gov.in, Comparative study of components, preparing the specifications of components, verifying the data sheets, applications of digital ICs, the characteristics/specifications of different digital ICs, etc.)

Course Title	FIELD THEORY				
Course Code	15EE3DCFTH	Credits	4	L-T-P-S	3-1-0-0
CIE	50 Marks(100% weightage)	SEE	100 Marks(50% weightage)		

Prerequisites:
Engineering Mathematics- I & II, Engineering Physics

UNIT-1		10 hours

Introduction to electrostatics: Introduction to line integral, surface integral, volume integral of vectors, Coulomb's Law (vector form), Electric Field Intensity (vector form),EFI due to different types of charge distributions.

Electric Flux Density (EFD), Gauss' Law, Divergence: Electric Flux Density (EFD), Gauss' Law Application, Divergence and Divergence Theorem

UNIT-2		10 hours

Energy and Potential: Energy spent in moving charge, Definition of Potential Difference (PD), PD due to Point Charge and System of Charge, Energy Density

Current and current density: Current and Current Density, Continuity of Current, Conductor, Properties, and Boundary Conditions

UNIT-3		8 hours

Dielectric: Dielectric materials, boundary conditions,
Poisson's and Laplace's equations: Derivations of Poisson's and Laplace's Equations, solution Poisson's and Laplace for Single Variables, Capacitance of different configurations using Laplace equation.

UNIT-4		10 hours

Steady Magnetic Field:
Biot-Savart Law, Ampere's circuital law, curl, Magnetic Flux, Flux Density, Scalar and Vector Magnetic Potentials, Force on a moving charge, Force on different current element, Inductance and Mutual Inductance Magnetic Boundary Condition.

UNIT-5		10 hours

Time varying fields and Maxwell's equations: Faraday's Law, Displacement Current, Maxwell's Equations in Point and Integral Form, Uniform plane waves, Wave equations , solution of wave equation, wave propagation through good dielectric, good conductor, skin depth, Poynting Theorem

This course will include lecture from QEEE followed by a suitable QUIZ

Text books:	
1	Engineering Electromagnetics, W H Hayt, J A Buck, M Jaleel Akhtar Tata McGraw-Hill, 8th Edition, 2014.
2	Electromagnetics**,** Schaum's Outline series Joseph A Ediminister Tata McGraw-Hill, revised second Edition, 2014.
Reference books:	
1	Electromagnetics with Applications, John Krauss and Daniel A Fleisch, McGraw-Hill, 5th Edition, 1999.
2	"Field and wave electromagnetic", David K Chary, Pearson Education Asia, Second Edition – 1989, Indian Reprint – 2001
Video links:	
1.	NPTEL Video Lecture On Electromagnetic Theory By Dr. Harishankar Ramachandran, IIT Madras. http://www.nptel.ac.in/courses/108106073/
2.	Phillips P., Engineering Dielectrics Volume IIA Electrical Properties of Solid Insulating Materials: Molecular Structure and Electrical Behaviour.http://www.astm.org/DIGITAL_LIBRARY/STP/SOURCE_PAGES/STP783.htm

Course outcomes At the end of the course ,the student will have the ability to
CO-1: Apply the fundamental Knowledge of electrostatics
CO-2: Apply the fundamental Knowledge of magneto-statics
CO-3: Formulate and analyze problems involving different media with boundaries using uniform plane wave

Course Title	Simulation Lab -I				
Course Code	15EE3DCSL1	Credits	01	L-T-P-S	0-0-1-0
CIE	50 Marks(100% weightage)	SEE	100 Marks(50% weightage)		

Part A Experiments (MATLAB)	
1.	Introduction: The MATLAB Environment, MATLAB as a calculator, Syntax and Semantics, Help, Plotting, Publishing. Introduction to matrices and operators, the colon operator, accessing parts of a matrix, combining matrices, Arithmetic operations, operator precedence.
2.	Introduction to functions, function I/O, definitions of functions, scope, advantages, scripts, File I/O, MAT files, excel files, text files, binary files.
3.	Signal generation, determination of the signal parameters. Three dimensional visualization of functions.
4.	Analysis of electrical networks in steady state.
5.	Transient analysis of electrical systems.
Part B Experiments (SIMULINK)	
1.	Introduction: Simulink as a tool box, steps involved in creating system models using the simulink library, solver selection, creating model hierarchy.
2.	Mathematical modeling of physical systems
3.	Realization of Boolean expression.
4.	Analysis of electrical systems under transient conditions. Transfer of variables between Simulink and MATLAB workspace.
5.	Realization of Uncontrolled and controlled rectifiers, determination of parameters associated with the output.

Course outcomes At the end of the course ,the student will have the ability to
CO-1: Navigate the MATLAB user interface, enter commands, Create access, modify, perform calculations, and visualize matrix data and customize plots.
CO-2: Import data from files, write and debug scripts and create functions.
CO-3: Visualize and interpret three dimensional plots of functions and responses of electrical systems.
CO-4: Create and simulate a model of a physical system
CO-5: Create mathematical models of systems such as controlled and uncontrolled rectifiers and determine the parameters associated with the output signal.
CO-6: Interact with MATLAB workspace.

IV SEMESTER

Course Title	Discrete Mathematics and Probability (Common to ECE/EEE/IT/ML/TCE)				
Course Code	15MA4GCDMP	Credits	4	L-T-P-S	3-1-0-0
CIE	50 Marks(100% weightage)	SEE	100 Marks (50% weightage)		

Prerequisites:

Basic concepts of set theory, relations and functions, Matrices, Basic concepts of probability, addition theorem, conditional probability, Bayes' theorem, discrete random variable, Binomial distribution

UNIT-1		12 hours

SET THEORY AND RELATIONS :
Introduction to sets and subsets, operations on sets, laws of set theory. Duality, Principle of duality for the equality of sets. Countable and uncountable sets. Addition Principle. Introduction to Relations. Definition, Types of functions, operations on relations, matrix representation of relations, composition of relations, properties of relations, equivalence relations, partial orders, Hasse diagram. Posets- extremal elements on posets.

(9L+3T)

Suggested Reading: Some particular functions- Floor and ceiling functions, Projection, Unary and Binary operations.

UNIT-2		10 hours

ALGEBRAIC STRUCTURES: Groups, properties of groups. Some particular groups- The Klein 4-group, additive group of integers modulo *n*, multiplicative group of integers mod *p*, permutation groups. Subgroups, Cyclic groups, Coset decomposition of a group, homomorphism, isomorphism. **(7L+3T)**
Suggested Reading: Lagrange's theorem and its consequences.

UNIT-3		9 hours

GRAPH THEORY :
Basic concepts: Types of graphs, order and size of a graph, in-degree and out-degree, connected and disconnected graphs, Eulerian graph, Hamiltonain graphs, subgraphs, dual graphs,

isomorphic graphs. Matrix representation of graphs: adjacency matrix, incidence matrix. Trees: spanning tree, breadth first search. Minimal spanning tree: Kruskal's algorithm, Prim's algorithm, shortest path-Dijkstra's algorithm.

(7L+2T)

Suggested Reading: Konigsberg bridge problem, Utility problem.

UNIT-4		**8 hours**

PROBABILITY: Theoretical distributions: Poisson distribution, Normal distribution: Error function, Central limit theorem.
Two dimensional random variables: Discrete random variable, Mathematical expectation, Covariance and Correlation. **(6L+2T)**

Suggested Reading: Exponential distribution, Uniform distribution. Continuous two dimensional random variables.

UNIT-5		**9 hours**

MARKOV CHAIN AND QUEUING THEORY :
Markov Chain, Probability vectors, stochastic matrices, fixed point vector, regular stochastic matrices. Higher transition probabilities, stationary distribution of regular Markov chains. Queuing models: Concept of Queue, M/M/1 queuing systems.

(7L+2T)

Suggested Reading: Power supply model, Economic cost profit model.

Mathematics Lab

- Probability distributions
- Minimal spanning tree- Kruskal's algorithm, Prim's algorithm.
- Shortest Path- Dijkstra's algorithm

Text books:

1.	Discrete Mathematical Structures, Dr. DSC, 4th edition, 2011-12, Prism Engineering Education Series.
2.	Higher Engineering Mathematics, B.S. Grewal, 43rd edition, 2013, Khanna Publishers.
3.	Discrete Mathematics, Seymour Lipschutz. M. Lipson, 2005, Tata McGraw Hill.

Reference books:

1.	Higher Engineering Mathematics, B.V. Ramana, 2007, Tata Mc. Graw Hill.
2.	Discrete Mathematics, J K Sharma, 3rd edition, 2013, Macmillan India Ltd.
3.	Queuing Theory and Telecommunications, Networks and applications, Giovanni Giambene, 2005, Springer
4.	Data Networks, Dimitri Bertsekas, Robert Gallager, 2nd edition, 1992, Prentice India
5.	Schaum's Outline of Probability and Statistics, John J Schiller, Murray R Speigel, 4th edition, 2013, Schaum's Outlines
E Books:	
1.	Discrete Mathematics for Computer Science, Gary Haggard, John Schlipf, Sue Whitesides, Thomson Brooks/Cole, 2006
2.	(1) http://www.khanacademy.org/math/probability/random-variablestopic/ random_variables_prob_dist/v/random-variables
3.	http://ocw.mit.edu/courses/mathematics/ (online course material)
Moocs:	
1.	www.nptelvideos.in/2012/11/discrete-mathematical-structures.html
2.	www.cs.berkeley.edu/~daw/teaching/cs70-s05
3.	https://www.khanacademy.org/

Course outcomes At the end of the course ,the student will have the ability to
CO-1: Understand the notation of set theory, relations and functions.
CO-2: Construct a Hasse diagram for partial orderings, Use many terms associated with graphs and prove whether two graphs are isomorphic.
CO-3: Obtain the probability of an event using discrete and continuous distributions, including the n-step transition probability.
CO-4: Analyse and classify simple states (recurrent/transient)
CO-5: Understand, derive and apply the properties of the M/M/m queuing model (properties like stationary probability, average waiting and system time, expected number of customers in

the queue)

Alternate Assessment Tool: 20% of CIE marks for the lab.

Question Paper Pattern

1. Each unit consists of one full question.
2. Each full question consists of three or four subdivisions.
3. Five full questions to be answered.
4. Internal choice in unit 2 and unit 3.

Course Title	Analog Integrated Circuits				
Course Code	15ES4GCAIC	Credits	6	L-T-P-S	3-0-1-2
CIE	50 Marks(100% weightage)	SEE	100 Marks (50% weightage)		

Prerequisites:

Elements of Electronics Engineering, Analog Microelectronics

UNIT-1		8 hours

Operational Amplifier Characteristics:
Introduction, DC Characteristics, AC Characteristics, Analysis of data sheets of an OP-AMP
Operational Amplifier Applications:
Review of basic Opamp applications, Instrumental Amplifier, V to I and I to V converter, Op-amp circuits using Diodes - Half wave rectifier, Full wave rectifier, Sample and hold circuit, Multiplier and Divider.

UNIT-2		7 hours

Comparators and Waveform Generators:
Introduction, comparator, Regenerative comparator (Schmitt Trigger), Square wave generator (Astable Multivibrator), Monostable Multivibrator, Triangular wave generator. (RC and Wein bridge oscillators only).

UNIT-3		7 hours

Voltage Regulators:
Introduction, Series op-amp regulator, IC Voltage regulators, 723 General purpose Regulator, Switching Regulator.
Active Filters:
Introduction, RC Active Filters, First order low pass filter, second order active filter, Higher order low pass filter, High pass active filter, All pass filter-phase shift lead and lag circuit

UNIT-4		7 hours

Timers :
Introduction to 555 timer, Description of Functional diagram, monostable operation, astable operation.

Phase locked loops : Introduction, Basic principles, phase detector/comparator, voltage controlled oscillator (VCO)		
UNIT-5		**7 hours**
D-A and A-D Converters: Introduction, Basic DAC Techniques- Weighted Resistor DAC, R-2R Ladder DAC. A-D Converters: Direct type ADCs- The parallel Comparator (Flash) A/D converter, Successive Approximation Converter, DAC/ADC Specification, Sigma – delta ADC		
Laboratory Experiment List: Inverting and non- inverting amplifier, voltage follower, Inverting and non- inverting summing Amplifier, Differentiator and integrator, Precision half wave and full wave rectifier, Zero crossing detector and Schmitt trigger, Weinbridge Oscillator, First order active low pass filter, First order active high pass filter, 555 as astable multivibrator, 555 as monostable multivibrator, IC 723 as low voltage and high voltage regulators, D to A convertor, A to D convertor, Clipping Circuits, Clamping Circuits		
Text books:		
1.	Linear Integrated Circuits-D. Roy Choudhury & Shail B.Jain(New age Publication)	
2.	Op-Amps and Linear Integrated Circuits-Ramakanth A.Gayakwad,4th edition ,PHI	
Reference books:		
1.	Linear Integrated Circuits-S.Salivahanan & V.S.Kanchana Bhaaskaran (Tata McGraw-Hill Publication)	
2.	Opamps and Linear ICs-David A.Bell (Prentice-Hall Publications)	
E Books:		
1.	http://freevideolectures.com/Course/2321/Electronics-for-Analog-Signal-Processing-I	
2.	http://freevideolectures.com/Course/2322/Electronics-for-Analog-Signal-Processing-I	
Moocs:		
1.	http://ocw.tudelft.nl/courses/microelectronics/analog-integrated-circuit-design/course-home/	
2.	Introductory Analog Electronics Laboratory (Spring 2007) by MIT Open Courseware | Reviews and Ratings	

3.	http://www.pannam.com/blog/free-resources-to-learn-electrical-engineering/

Course outcomes

At the end of the course ,the student will have the ability to

CO-1: Define, understand and explain the DC and AC performance characteristics of Opamp, applications of Opamp, working of 555 timer and voltage regulators.

CO-2: Apply the knowledge of KVL and KCL to obtain voltage /current/waveform at different points in analog electronic circuits such as Opamp amplifiers, rectifiers, filters, waveform generators, PLL, data converters, regulators, comparators ,555 timers.

CO-3: Analyze analog electronic circuits such as Opamp amplifiers, rectifiers, filters, waveform generators, PLL, data converters, regulators, comparators, and 555 timers etc to obtain voltage/current/waveform at different points that meet desired specifications.

CO-4: Design analog electronic circuits such as Opamp amplifiers, rectifiers, filters, waveform generators, PLL, data converters, regulators, comparators ,555 timers etc. that meet desired specifications.

CO-5: Conduct experiments using analog electronic components, electronic instruments to function as amplifiers, comparators, rectifiers, filters, astable and monostable circuits using 555, data converters.

CO-6: Engage in self-study/independent study to formulate, design, implement, analyze and demonstrate an application using analog electronic components/ASLK/Multisim through a mini-project and submit the mini-project and make an oral presentation of the work.

Course Title	MICROCONTROLLERS				
Course Code	15ES4GCMCS	Credits	6	L-T-P-S	3-0-1-2
CIE	50 Marks(100% weightage)	SEE	100 Marks (50% weightage)		

Prerequisites:

Elements of Electronics Engineering, Digital Electronics

UNIT-1		7 hours

INTRODUCTION TO MICROCOMPUTER AND MICROCONTROLLER:
Introduction to Microprocessors, Internal organization of computer- Bus Structures, Harvard & Von-Neumann CPU architecture, **The 8051 Architecture:** Introduction, 8051 Microcontroller Hardware, Input / Output Pins, External Memory Interface.

UNIT-2		8 hours

MICROCONTROLLER PROGRAMMING:
Instruction set architecture-RISC & CISC CPU Architectures, Pipelining, Execution of an instruction, Addressing Modes and Instruction set. Example Demonstration using 8051 instruction set, Data transfer instructions, Arithmetic instructions, Logical instructions, Branching and Subroutines, Example programs.

UNIT-3		8 hours

CONCEPTS OF EMBEDDED 'C' PROGRAMMING:
Data types, examples in 8051 C, program structures, logical operations, Memory and I/O access, Programming peripherals (Examples: Timer / Counter), Programming serial communication (serial data input/output) - example programs using 8051

UNIT-4		7 hours

INTERRUPTS AND INTERRUPT PROGRAMMING:
Concept of Interrupts, Interrupts in 8051. Programming Timer Interrupts, Programming External Hardware Interrupts, Programming Serial Communication Interrupts

UNIT-5		6 hours

INTERFACING AND APPLICATIONS:
Interfacing 8051 to LCD, DAC, ADC Stepper motor interfacing. Applications of

microcontrollers.	
LABORATORY EXPERIMENTS: Part A: Data Transfer, Logical-Byte/Bit manipulations, Jump and Subroutine Calls using Assembly language, counters and delay generation using timers, Embedded C programs Part B: Interfacing: LCD Display, Stepper motor control, logical interface, 7 segment interface, DAC and keyboard.	
Text books:	
1.	"The 8051 Microcontroller Architecture, Programming & Applications", Kenneth J. Ayala 2e, Thomson Learning 2005
2.	"The 8051 Microcontroller and Embedded Systems – using assembly and C", Muhammad Ali Mazidi and Janice Gillespie Mazidi and Rollin D. McKinlay; PHI, 2006
Reference books:	
1.	'Computer Organization and Architecture', Carl Hamacher, Mc Graw Hill, 5th Edition
2.	http://cnx.org/contents/dadb4fd5-8390-4323-a056-f6381587e89a@1/Microcontroller%288051%29-Lab
E Books:	
1.	nptel.ac.in/courses/Webcourse-contents/IIT.../microcontrollers
2.	http://freevideolectures.com/Course/3018/Microprocessors-and-Microcontrollers
Moocs:	
1.	**Embedded Systems - Shape The World**-https://www.edx.org/course/embedded-systems-shape-world-utaustinx-ut-6-02x
2.	**Electronic Interfaces: Bridging the Physical and Digital Worlds-** https://www.edx.org/course/electronic-interfaces-bridging-physical-uc-berkeleyx-ee40lx-0
Course outcomes At the end of the course ,the student will have the ability to	
CO-1: Understand and explain computer based and memory based architecture, microcontroller, pipelining, addressing modes, data types in Embedded C, basics of serial communication, timer configuration and interrupt handling	
CO-2: Calculate instruction execution time, delay, baud rate, and write assembly and C Code,	

identify the timer mode, serial communication mode and interrupt priorities
CO-3: Debug/ analyze the code in assembly as well as Embedded C
CO-4: Identify the IDE to conduct experiments by simulating, debugging and executing the assembly and Embedded C code
CO-5: Engage in independent study/ self-study by preparing a 5 min video on 'Applications of Microcontrollers for health, safety, environment and society'
CO-6: Work as an individual and as a team-member to design, formulate and implement experiments using microcontroller through conduction of an Open-Ended experiments

Course Title	**CONTROLSYSTEMS**				
Course Code	**15ES4GCCST**	**Credits**	**4**	**L-T-P-S**	**3-1-0-0**
CIE	**50 Marks(100% weightage)**	**SEE**	**100 Marks (50% weightage)**		

Prerequisites:

Linear Circuit Analysis, Engineering Mathematics I & II, Advanced Mathematics

UNIT-1		**9+3 hours**

Introduction:
Examples of Control Systems, open loop vs Closed loop Systems, Mathematical Modeling of Linear Systems: Transfer functions, Mechanical Systems, Analogous Systems, Block diagram, Signal Flow graph, Compensators: Lag, Lead(obtaining transfer functions only).

UNIT-2		**6+3 hours**

Controllers & Time response analysis:
Step response of first order, second order systems, response specification ,steady state error and error constants. Example of effect of P-I controllers on the time response

UNIT-3		**9+2 hours**

Stability Analysis:
Concept of stability, RH criterion, applications of RH criterion with limitations, Nyquist plot, Polar plots, Stability Analysis using Nyquist criterion

UNIT-4		**6+2 hours**

Root locus technique:
Introduction to root locus concepts, Construction rules, Analysis of stability by root locus plot

UNIT-5		**6+2 hours**

Frequency response Analysis:
Bode plots, Relative stability, Frequency domain specification.

Text books:

1.	Control Engineering by Nagrath & Gopal, New Age International Publishers

2.	Engineering control systems - Norman S. Nise, John WILEY & sons , fifth Edition
Reference books:	
1.	Modern control Engineering-Ogata , Prentice Hall
2.	Automatic Control Systems- B.C Kuo, John Wiley and Sons
E Books:	
1.	http://en.wikibooks.org/wiki/Control_Systems
2.	http://www.electrical4u.com/control-system-closed-loop-open-loop-control-system/#practical-examples-of-open-loop-control-system
3.	http://www.facstaff.bucknell.edu/mastascu/eControlHTML/CourseIndex.html
Moocs:	
1.	www.nptel.com/IITK
2.	https://www.edx.org/course/
3.	http://nptel.ac.in/courses/108103007/1
Course outcomes At the end of the course ,the student will have the ability to	
CO-1: Obtain mathematical models of open loop and closed loop physical systems	
CO-2: Apply mathematical techniques to perform time response analysis of a control system	
CO-3: Carry out stability analysis using different mathematical techniques	

Course Title	SIGNALS AND SYSTEMS				
Course Code	15ES4GCSAS	Credits	4	L-T-P-S	3-1-0-0
CIE	50 Marks(100% weightage)	SEE	100 Marks (50% weightage)		

Prerequisites:

Linear Circuit Analysis, Engineering Mathematics I & II, Advanced Mathematics

UNIT-1		10 hours

INTRODUCTION: Definitions of a signal and a system, classification of signals, basic operations on signals, elementary signals, Systems viewed as Interconnections of operations, properties of systems.

UNIT-2		10 hours

TIME-DOMAIN REPRESENTATIONS FOR LTI SYSTEMS: Convolution, impulse response representation, Convolution Sum and Convolution Integral, Properties of impulse response representation, Differential and difference equation Representations, Block diagram representations.

UNIT-3		8 hours

FOURIER SERIES: Introduction, Discrete time and continuous time Fourier series (derivation of trigonometric Fourier series representation are excluded), Properties of Fourier series (No proof), Applications of Fourier series. Sampling Theorem and Reconstruction

UNIT-4		10 hours

FOURIER TRANSFORM: Discrete and continuous Fourier transforms & their properties (With proof). Fourier transform representation of periodic signals, Applications of Fourier transform, Frequency response of LTI systems. Laplace Transform and its Applications.

UNIT-5		10 hours

Z-TRANSFORMS: Introduction, Z – transform, properties of ROC & Z – transforms Inverse Z–transforms, unilateral Z- Transform, analysis of LTI Systems and application to solve Difference equations.

Text books:

1.	Simon Haykin and Barry Van Veen "Signals and Systems", John Wiley & Sons, 2001.Reprint 2002

2.	Alan V Oppenheim, Alan S, Willsky and A Hamid Nawab, "Signals and Systems" Pearson Education Asia / PHI, 2nd edition, 1997. Indian Reprint 2002
Reference books:	
1.	H. P Hsu, R. Ranjan, "Signals and Systems", Scham's outlines, TMH, 2006
2.	B. P. Lathi, "Linear Systems and Signals", Oxford University Press, 2005
3.	Ganesh Rao and SatishTunga, "Signals and Systems", Sanguine Technical Publishers, 2004
E Books:	
1.	NPTEL lecture Video on Signals and Systems by Prof. S.C.Dutta Roy, http://www.satishkashyap.com/2012/04/iit-video-lectures-on-signals-and.html
2.	NPTEL lecture Video on Signals and Systems by Prof. T.K. Basu,IIT Kharagpur. http://www.nptel.ac.in/courses/108105065/
3.	NPTEL on line Course Modules–IIT Bombay –Signals and Systems http://www.cdeep.iitb.ac.in/nptel/Electrical%20&%20Comm%20Engg/Signals%20and%20System/TOC-M1.html
Moocs:	
1.	https://www.edx.org/course/signals-systems-part-1-iitbombayx-ee210-1x-0
2.	https://www.edx.org/course/signals-systems-part-2-iitbombayx-ee210-2x-0
Course outcomes At the end of the course ,the student will have the ability to	
CO-1: Apply the knowledge of mathematics and engineering to analyze and obtain the response of continuous and discrete time systems.	
CO-2: Analyze Continuous Time and Discrete Time signals and systems in Frequency domain using Fourier analysis tools like CTFS, CTFT, DTFS and DTFT	
CO-3: Analyze Discrete Time systems using Z-transforms.	

Course Title	Simulation Lab -II				
Course Code	15EE4DCSL2	Credits	01	L-T-P-S	0-0-1-0
CIE	50 Marks(100% weightage)	SEE	100 Marks(50% weightage)		

Simulation Experiments	
1.	To find the resonance frequency, band width and Q factor of the given RLC series and parallel circuit.
2.	Application of circuit theorems for a given electrical network and visualize the results.
3.	Design and analysis of an amplifier circuit.
4.	Design and analysis of an oscillator circuit.
5.	Verification of voltage and current relationships in a three phase AC system.
6.	Simulation and analysis of Inverting and Non inverting amplifier.
7.	Simulation of a Schmitt trigger circuit.
8.	Stability studies of a system using Bode plot.
9.	Simulation of diode clipping and clamping circuits.

Course outcomes

At the end of the course ,the student will have the ability to

CO-1: Develop simulation circuit for a given electric network and verify KVL and KCL.

CO-2: Design and analysis of power amplifier, Inverting and Non inverting amplifiers and oscillator circuit through simulation.

CO-3: Develop circuit model to analyze a second order system and perform stability studies

CO-4: Develop circuit model and apply circuit theorems.

MANDATORY MATHEMATICS COURSES FOR LATERAL ENTRY STUDENTS

Course Title	**Mathematics-I** (All Branches)				
Course Code	**15MA3IMMAT**	**Credits**	**0**	**L-T-P-S**	**0:0:0:0**
CIE	100 marks (100% weightage)				

Pre-requisites:

Basic concepts of Trigonometry, Trigonometric formulas, concept of differentiation, concept of integration

UNIT I		**[9 hours]**

DIFFERENTIAL AND INTEGRAL CALCULUS:
List of standard derivatives including hyperbolic functions, rules of differentiation. Differentiation of product of two functions using Leibnitz rule (direct problems). Taylor's and Maclaurin's series expansion for functions of single variable. List of standard integrals, integration by parts. Definite integrals – problems.

(7L+2T)

UNIT II		**[10 hours]**

POLAR COORDINATES AND PARTIAL DERIVATIVES :
Polar curves: Polar coordinates, angle between radius vector and tangent, angle between two polar curves. Partial differentiation. Total differentiation-Composite and Implicit functions. Taylor's and Maclaurin's series expansion for functions of two variables. Jacobians and their properties (without proof) – Problems. **(7L+3T)**

UNIT III		**[08 hours]**

FIRST ORDER ORDINARY DIFFERENTIAL EQUATIONS :
Introduction to first order differential equations. Linear equation and its solution. Bernoulli's equation and its solution. Exact differential equation and its solution. Orthogonal Trajectories. **(6L+2T)**

UNIT IV		[9 hours]

SECOND AND HIGHER ORDER ORDINARY DIFFERENTIAL EQUATIONS:
Ordinary differential equations with constant coefficients: Homogeneous differential equations, non-homogeneous differential equations – Particular integral for functions of the type f (x) = e^{ax}, sin(ax), cos(ax), x^n, e^{ax}sin(bx), e^{ax}cos(bx). Method of variation of parameters. Cauchy's and Legendre differential equations.

(7L+2T)

UNIT V		[8 hours]

VECTOR CALCULUS AND ORTHOGONAL CURVILINEAR COORDINATES (OCC):
Recapitulation of scalars, vectors and operation on scalars and vectors. Scalar and vector point functions. Del operator, gradient-directional derivative, divergence, curl and Laplacian operator. Vector identities (without proof). Cylindrical and Spherical polar coordinate systems. Expressing a vector point function in cylindrical and spherical systems. Expressions for gradient, divergence, curl and Laplacian in OCC.

(6L+2T)

Text Books:

1.	Advanced Engineering Mathematics, Erwin Kreyszig, Wiley Precise Textbook series, Vol. 1 and Vol. 2, 10th edition, 2014, Wiley- India.
2.	Higher Engineering Mathematics, B.V. Ramana, 7th reprint, 2009, Tata Mc. Graw Hill.

Reference Books:

1.	Higher Engineering Mathematics, B.S. Grewal, 43rd edition, 2014, Khanna Publishers
2.	Advanced Engineering Mathematics, 4th edition, 2011, by Dennis G. Zill and Cullen, Jones and Bartlett India Pvt. Ltd.

E Books:

1.	Engineering Mathematics, K. A. Stroud, Dexter J. Booth, Industrial Press, 2001 http://books.google.co.in/books/about/Engineering_Mathematics.html?id=FZncL-xB8dEC&redir_esc=y.
2.	Advanced Engineering Mathematics, P. V. O'Neil, 5th Indian reprint, 2009, Cengage learning India Pvt. Ltd.

3.	http://ocw.mit.edu/courses/mathematics/ (online course material)
Moocs:	
1.	https:// www.khanacademy.org/Math
2.	https:// www.class-central.com/subject/math (MOOCS)
3.	E-learning: www.vtu.ac.in
Course Outcomes At the end of the course, the student will have the ability to	
CO-1: Understand the basic concepts of differentiation and integration.	
CO-2: Apply the concepts of polar curves and multivariate calculus.	
CO-3: Apply analytical techniques to compute solutions of first and higher order ordinary differential equations.	
CO-4: Apply techniques of vector calculus to engineering problems.	
CO-5: Comprehend the generalization of vector calculus in curvilinear coordinate system.	

Course Title	**Mathematics-II** (All Branches)				
Course Code	**15MA4IMMAT**	**Credits**	**0**	**L-T-P-S**	**0:0:0:0**
CIE	100 marks (100% weightage)				

Pre-requisites:

Basic concepts of Trigonometry, Trigonometric formulas, concept of differentiation, concept of integration.

UNIT I		**[8 hours]**

LAPLACE TRANSFORMS:
Laplace transforms of standard functions. Properties and problems. Laplace Transform of Periodic functions with plotting. Unit step function.

(6L+2T)

UNIT II		**[9 hours]**

INVERSE LAPLACE TRANSFORMS:
Inverse Laplace transforms of standard functions. Properties and problems. Solution of ODE-Initial and Boundary value Problems.

(7L+2T)

UNIT III		**[11 hours]**

DOUBLE INTEGRAL:
Evaluation of double integral. Change of order of integration. Change of variables to polar coordinates. Application: Area.

(8L+3T)

UNIT IV		**[8 hours]**

TRIPLE INTEGRALS AND IMPROPER INTEGRALS:
Evaluation of triple integral. Application: Volume. Gamma and Beta functions-definition Relation between Gamma and Beta functions. Properties and Problems. **(6L+2T)**

UNIT V				[8 hours]

VECTOR INTEGRATION:
Line integral. Green's theorem. Stokes' theorem. Gauss divergence theorem.

(6L+2T)

Text Books:	
1.	Advanced Engineering Mathematics, Erwin Kreyszig, Wiley Precise Textbook series, Vol. 1 and Vol. 2, 10th edition, 2014, Wiley- India.
2.	Advanced Engineering Mathematics, 4th edition, 2011, by Dennis G. Zill and Cullen, Jones and Bartlett India Pvt. Ltd
Reference Books:	
1.	Higher Engineering Mathematics, B.S. Grewal, 43rd edition, 2014, Khanna Publishers.
2.	Higher Engineering Mathematics, B.V. Ramana, 7th reprint, 2009, Tata Mc. Graw Hill.
E Books:	
1.	(1) Engineering Mathematics, K. A. Stroud, Dexter J. Booth, Industrial Press, 2001 http://books.google.co.in/books/about/Engineering_Mathematics.html?id=FZncL-xB8dEC&redir_esc=y.
2.	Advanced Engineering Mathematics, P. V. O'Neil, 5th Indian reprint, 2009, Cengage learning India Pvt. Ltd.
3.	http://ocw.mit.edu/courses/mathematics/ (online course material)
Moocs:	
1.	https:// www.khanacademy.org/Math
2.	https:// www.class-central.com/subject/math (MOOCS)
3.	E-learning: www.vtu.ac.in

Course Outcomes At the end of the course, the student will have the ability to
CO-1: Use Laplace transforms to solve differential equations.
CO-2: Apply double integrals to compute areas.
CO-3: Learn to use triple integrals in computing volumes.
CO-4: Use Gamma and Beta functions to evaluate integrals.
CO-5: Understand the use of integral calculus in scalar and vector fields.

Assessment Pattern

Continuous Internal Evaluation (CIE) includes test, quiz, assignment, seminar, term paper, open ended experiments, mini-projects, two minute videos, MOOCs etc.

Alternative Assessment:
Alternative Assessment Tool (AAT) includes seminar, assignments, term paper, open ended experiments, mini-projects, two minute videos, MOOCs etc.

Semester End Examination (SEE) – A written examination for theory courses and practical/design examination with built-in oral part(Viva-Voce).

Both CIE and SEE have equal (50:50) weightage. The Student's performance in a course shall be judged individually and together based on the results of CIE and SEE.

ASSESSMENT PATTERNS WITH 20% WEIGHTAGE FOR AAT
Assessment pattern for Regular/Normal courses:

COMPONENT	THEORY		TOTAL MARKS
Type of Assessment	Test	Quiz or AAT	
Max. CIE Marks	40	10	50

Assessment pattern for Integrated Courses:

COMPONENT	THEORY		PRACTICAL			Total Marks
Type of Assessment	Test	Quiz or AAT	Records & Performance	LabTest	Viva-voce/ AAT	
Max. CIE Marks	20	05	10	10	05	50

Assessment pattern for Comprehensive Courses
(Applicable for the batches admitted from 2014-15 onwards):

Component	Theory (50%)		Practical (30%)		Self-Study (20%)	Total Marks
Type of Assessment	Test	Quiz	Lab Performance/ Record	LabTest	AAT	
Max CIE Marks	20	05	10	05	10	50

ASSESSMENT PATTERNS WITH 40% WEIGHTAGE FOR AAT

A faculty, who wishes to design AAT with more than 20% weightage, shall create a new pattern for assessment indicating weightages for all the three components.

Note: Students must secure a minimum of 40% in CIE and should have 85% attendance.

In case of integrated and comprehensive courses, a student must secure a minimum of 40% marks and 85% attendance in both theory and practical components. In addition, the overall CIE marks including theory, practical and self-study components shall not be less than 40%.

Note - For a detailed Assessment pattern refer Rules and Regulation book (2015-16)

BMS COLLEGE OF ENGINEERING, BENGALURU-19

(Autonomous Institute Affiliated to VTU)

Scheme & Syllabus of Teaching for 2016-17

M. Tech. Power Electronics

PROGRAM EDUCATIONAL OBJECTIVES

Graduates of the M. Tech Power Electronics Program will,

1. **Excel professionally in Power Electronics and allied domains.**

2. **Undertake research and development that addresses technological requirements of Industry and Institutes of higher learning.**

3. **Adapt to the changing needs of Industry/Society through lifelong learning.**

PROGRAM OUTCOMES

1. **Acquire in-depth knowledge** of specific discipline or professional area, including wider and global perspective, with an ability to discriminate, evaluate, analyze and synthesize existing and new knowledge, and integration of the same for enhancement of knowledge.

2. **Analyze** complex engineering problems critically, **apply** independent judgment for synthesizing information to make intellectual and/or creative advances for conducting research in a wider theoretical, practical and policy context.

3. **Think laterally and originally**, conceptualize and solve engineering problems, evaluate a wide range of potential solutions for those problems and arrive at feasible, optimal solutions after considering public health and safety, cultural, societal and environmental factors in the core areas of expertise.

4. **Extract information** pertinent to unfamiliar problems through literature survey and experiments, **apply appropriate research methodologies**, techniques and tools, design, conduct experiments, analyze and interpret data, demonstrate higher order skill and view things in a broader perspective, contribute individually/in group(s) to the development of scientific/technological knowledge in one or more domains of engineering.

5. **Create, select, learn** and apply appropriate techniques, resources, and modern engineering and IT tools, including prediction and modelling, to complex engineering activities with an understanding of the limitations.

6. **Possess knowledge** and understanding of group dynamics, recognize opportunities and contribute positively to **collaborative-multidisciplinary scientific research,** demonstrate a capacity for self-management and teamwork, decision-making based on open-mindedness, objectivity and rational analysis in order to achieve common goals and further the learning of themselves as well as others.

7. Demonstrate knowledge and **understanding of engineering and management principles** and apply the same to one's own work, as a member and leader in a team, manage projects

efficiently in respective disciplines and multidisciplinary environments after consideration of economic and financial factors.

8. **Communicate** with the engineering community, and with society at large, regarding complex engineering activities confidently and effectively, such as, being able to comprehend and write effective reports and design documentation by adhering to appropriate standards, make effective presentations, and give and receive clear instructions.

9. Recognize the need for, and have the preparation and **ability to engage in life-long learning independently**, with a high level of enthusiasm and commitment to improve knowledge and competence continuously.

10. **Acquire professional and intellectual integrity**, professional code of conduct, ethics of research and scholarship, consideration of the impact of research outcomes on professional practices and an understanding of responsibility to contribute to the community for sustainable development of society.

11. **Observe** and **examine critically** the outcomes of one's actions and make corrective measures subsequently, and learn from mistakes without depending on external feedback.

BMS COLLEGE OF ENGINEERING, BENGALURU-19

(Autonomous Institute Affiliated to VTU)

Scheme & Syllabus of Teaching for 2016-17

M. Tech. Power Electronics

I Semester **CREDIT BASED**

Subject Code	Course Title	Credits				CREDITS
		L	T	P	S	
16EEPE1CMT	Applied Mathematics	3	0	0	0	**3**
16EEPE1CPS	Power Semiconductor Devices	3	0	0	0	**3**
16EEPE1CSP	Solid State Power Controllers	4	0	1	1	**6**
16EEPE1CMS	Modeling & Simulation of Power Electronics Systems	3	0	1	1	**5**
16EEPE1EXX	Elective-1	3	0	0	0	**3**
16EEPE1EXX	Elective - 2	3	0	0	0	**3**
16EEPE1CRM	Research Methodology	2	0	0	0	**2**
Total		**21**	**0**	**2**	**2**	**25**

Note: Two electives to be chosen from the list below:
Elective will be offered for a minimum strength of six candidates (out of 18) / eight candidates (out of 24)

Course Elective		**Course Elective**	
16EEPE1EDM	Digital Measurements	16EEPE1EES	Embedded System Design
16EEPE1EMA	Modeling & Analysis of Electrical Machines	16EEPE1ESC	Soft Computing
16EEPE1EPS	Power Electronics in Smart Grid	16EEPE1ECV	CMOS VLSI Design
16EEPE1EAC	Advanced Control System	16EEPE1ERT	Real Time Digital Signal Processing

BMS COLLEGE OF ENGINEERING, BENGALURU-19

(Autonomous Institute Affiliated to VTU)

Scheme & Syllabus of Teaching for 2016-17

M. Tech. Power Electronics

II Semester **CREDIT BASED**

Subject Code	Course Title	Credits				CREDITS
		L	T	P	S	
16EEPE2CAD	AC-DC Drives	3	0	1	1	**5**
16EEPE2CSM	Switched Mode Power Conversion	3	1	1	0	**5**
16EEPE2CFC	FACTs Controllers	4	0	0	1	**5**
16EEPE2EXX	Elective - III	3	0	0	0	**3**
16EEPE2EXX	Elective - IV	3	0	0	0	**3**
16EEPE2EXX	Institution Elective	4	0	0	0	**4**
Total		**21**	**0**	**2**	**2**	**25**

Note: Two electives to be chosen from the list below:

Elective will be offered for a minimum strength of six candidates (out of 18) / eight candidates (out of 24)

Elective - III		Elective - IV	
16EEPE2EPD	Power Electronics System Design using ICs	16EEPE2EDS	DSP Applications to Drives
16EEPE2EPQ	Power Quality Issues and Mitigation	16EEPE2EPC	Power Quality Enhancement using Custom Power Devices
16EEPE2EPS	Power Supply Systems	16EEPE2EEM	Electro Magnetic Compatibility
16EEPE2EPW	PWM Converters & Applications	16EEPE2EHV	HVDC Power Transmission

Institution Elective	
16EEPE2ERE	Renewable Energy & Photovoltaics
16EEPE2EMS	Micro & Smart Systems

BMS COLLEGE OF ENGINEERING, BENGALURU-19

(Autonomous Institute Affiliated to VTU)

Scheme & Syllabus of Teaching for 2016-17

M. Tech. Power Electronics

III Semester **CREDIT BASED**

Subject Code	Course Title	Credits				CREDITS
		L	T	P	S	
16PEPC3CIN	Internship	0	0	21	0	**21**
16PEPC3CIP	Project work (I-phase)	0	0	4	0	**4**
Total		**0**	**0**	**25**	**0**	**25**

NOTE:

III Semester:

- **Internship:** The student shall undergo internship for 16 weeks.

  Preliminary Report submission and Evaluation after 8th week of Internship to be carried out by the Internal Guide of the college and a senior faculty for 100 marks

  Final Report submission and Evaluation after 16th week of Internship to be carried out by the Internal Guide of the college and a senior faculty. Report Evaluation to be completed within two weeks of submission for 100 marks.

  Viva-Voce on Internship - To be conducted by the Internship Guide (from the college) and the External Guide / Examiner within 2 weeks of Submission with a senior faculty / HOD as chairman for 100 marks

- **Project Phase: I**

  Problem formulation and submission of **synopsis** within 8 weeks from the commencement of 3rd semester, which shall be evaluated for 50 marks by the committee constituted for the purpose by the Head of the Department comprising the guide, senior faculty of the department with HOD as Chairman.

  Literature survey and progress done after 16 weeks shall be evaluated by guide and external examiner with senior faculty / HOD as chairman for 50 marks

BMS COLLEGE OF ENGINEERING, BENGALURU-19

(Autonomous Institute Affiliated to VTU)

Scheme & Syllabus of Teaching for 2016-17

M. Tech. Power Electronics

IV Semester **CREDIT BASED**

Subject Code	Course Title	Credits				CREDITS
		L	T	P	S	
16PEPC4CPR	Project work (Final phase)	0	0	23	0	**23**
16PEPC4CTS	Technical Seminar	0	0	02	0	**02**
Total		**0**	**0**	25	**0**	**25**

NOTE:

IV Semester:

- **Project Phase-II -** Internal Evaluation of progress in Project work shall be evaluated after 8 weeks for 100 marks by the committee constituted for the purpose by the Head of the Department comprising the guide and senior faculty of the department with HOD as Chairman
- **Project Phase-III** - Internal Evaluation of Project Demonstration, which shall be evaluated after 15 weeks for 100 marks by the committee constituted for the purpose by the Head of the Department.
- **Final Evaluation of Project Work and Viva-voce**.
  - Final evaluation of project to be carried out after 16 weeks from the date of commencement of 4th semester.
  - The Internal Examiner (the project guide with a teaching experience of at least three years) and External Examiner with HOD as chairman will complete the final evaluation of Project.
- Internal and External Examiners shall carry out the evaluation for 100 Marks each and the average of these marks shall be the final marks of the Project Evaluation.
- **Viva – Voce** : The Viva-Voce shall be conducted jointly by Internal Examiner and External Examiner with HOD as chairman for 100 Marks

I SEMESTER

BMS COLLEGE OF ENGINEERING, BENGALURU-19

(Autonomous Institute Affiliated to VTU)

Scheme & Syllabus of Teaching for 2016-17

Subject	APPLIED MATHEMATICS	Sub-code	16EEPE1CMT
Credits	03	L-T-P-S	3-0-0-0

Course outcomes:

CO1: Recognize the appropriate numerical method to solve algebraic, transcendental, polynomial and system of nonlinear equations.

CO2: Determine the Eigen values of real symmetric matrices.

CO3: Analyze the interpolating polynomial for the given set of experimental observations.

CO4: Apply the concepts of graph theory to engineering oriented problems.

CO5: Demonstrate the concepts of vector space, basis and dimension. Also solve the matrix associated with the linear transformation.

Numerical Methods: Solution of algebraic and transcendental equations- iterative methods based on second degree equation – Muller method, (no derivation) Chebyshev method, general iteration method (first order),acceleration of convergence, system of non-linear equations, and complex roots– Newton-Raphson method.

System of Linear Algebraic Equations and Eigen Value Problems: Iterative methods - Gauss-Seidal method, SOR method, Eigen value problems – Gerschgorian circle, Eigen values and Eigen vectors of real symmetric matrices - Jacobi method, Givens method.

Interpolation: Hermite interpolation, spline interpolation, numerical solution of differential equations – Numerov method, Birge –Vieta method and Bairstow's method.

Graph Theory: Basic terminologies, types of graphs, sub graphs, graphs isomorphism, connected graphs-walks, paths, circuits, connected and disconnected graphs, operations on graphs, Eulerian paths and circuits, Hamiltonian paths and circuits, applications of graphs.

Linear Algebra: Vector spaces, linear dependent, independence, basis and dimension, elementary properties, examples. Linear Transformations - Definition, properties, range, null space, rank, nullity and representation of transformations by matrices.

REFERENCE BOOKS:

1. M K Jain, S R K Iyengar and R K Jain, "Numerical Methods for Scientific and Engineering Computations", New Age International, 2004.
2. M K Jain, "Numerical Solution of Differential Equations", 2nd Edition, New Age International, 2008.
3. Narsingh Deo, "Graph Theory with Applications to Engineering and Computer Science", PHI, 2012.
4. Kenneth Hoffman and Ray Kunze, "Linear Algebra", 2nd Edition, PHI, 2011

BMS COLLEGE OF ENGINEERING, BENGALURU-19

(Autonomous Institute Affiliated to VTU)

Scheme & Syllabus of Teaching for 2016-17

Subject	POWER SEMICONDUCTOR DEVICES	Sub-code	16EEPE1CPS
Credits	03	L-T-P-S	3-0-0-0

Course outcomes:

CO1: Apply knowledge of physics of semiconductor and electronic devices to develop and control power electronic systems.

CO2: Describe, analyze characteristics and compare various types of power semiconductor devices for theoretical and practical context.

CO3: Identify and prioritize the use of power devices in various power electronic systems and control applications.

CO4: Apply the concept of thermal design for various power electronic equipments.

CO5: Develop skills and apply the principles to explore the possibility of emerging power semiconductor devices in different areas.

Power Diodes: Basic Structure and I-V Characteristics . Breakdown Voltages and Control . On State Losses, Switching Characteristics . Turn on Transient . Turn off Transient . Reverse Recovery Transient . Schottky Diodes . Snubber Requirements for Diodes and Diode Snubbers.Modelling and simulation of Power Diodes.

Thyristors:

a) Thyristors: - Basic Structure . V-I Characteristics . Turn on Process . On State operation . Turn off process, Switching Characteristics .Turn on Transient and di/dt limitations . Turn off Transient . Turn off time and dv/dt limitations . Ratings of Thyristors . Snubber Requirements and Snubber Design. Modeling and simulation of Thyristors.

b) Gate Turnoff Thyristor (GTO):. Basic Structure and Operation . GTO Switching Characteristics. GTO Turn on Transient. GTO Turn off Transient Minimum ON and OFF State times .Maximum Controllable Anode Current Overcurrent protection of GTOs Modeling and simulation of GTOs.

c) Triacs: Basic Structure and operation . V-I Characteristics .

Transistors:

a) Power BJTs: . Basic Structure and I-V Characteristics .Switching Characteristics.

b) MOSFETs - Basic Structure . V-I Characteristics . Turn on Process . On State operation . Turn off process . Switching Characteristics Resistive Switching Specifications . Clamped Inductive Switching Specifications - Turn on Transient and di/dt limitations . Turn off Transient Turn off time . Switching Losses . Effect of Reverse Recovery Transients on Switching Stresses and Losses - dv/dt limitations . Gating Requirements Gate Charge - Ratings of MOSFETs. FBSOA and RBSOA Curves . Device Protection -Snubber Requirements . Modelling and simulation of Power MOSFETS.

c) Insulated Gate Bipolar Transistors (IGBTs):. Basic Structure and Operation .Latch up IGBT Switching Characteristics . Resistive Switching Specifications . Clamped Inductive Switching Specifications - IGBT Turn on Transient . IGBT Turn off Transient- Current Tailing - Ratings of MOSFETs. FBSOA and RBSOA Curves . Switching Losses - Minimum ON and OFF State times - Switching Frequency Capability - Overcurrent protection of IGBTs . Short Circuit Protection.

Snubber Requirements and Snubber Design.

Thermal design of power electronic equipment:
Heat transfer by conduction, transient thermal impedance - heat sinks .Heat transfer by radiation and convection - Heat Sink Selection for Power Semiconductor Devices

Emerging Devices:
New power semiconductor devices: MOS Gated Thyristors,MOS Controlled Thyristors, emitter turn-off thyristor (ETOs), Integrated Gate Commutated Thyristor (IGCT), Static induction transistor (SIT), Emitter Switched Thyristor.

REFERENCE BOOKS:
1. Ned Mohan, Tore M. Undeland, William P. Robbins, **"Power Electronics Converters, Applications, and Design",** 3rd Edition. Wiley India Pvt Ltd, 2011.
2. M.H. Rashid**, Power Electronics: Circuits, Devices, and Applications,** Published by Prentice Hall, 3rd Edition, 2004.
3. G. Massobrio, P. Antognetti, **"Semiconductor Device Modeling with Spice",** McGraw-Hill, 2nd Edition, 2010.
4. B. Jayant Baliga, "**Power Semiconductor Devices**", PWS Publication, 1st Edition, 1995.
5. V. Benda, J. Gowar, and D. A. Grant, "**Discrete and Integrated Power Semiconductor Devices: Theory and Applications**", John Wiley &Sons, 1999.

BMS COLLEGE OF ENGINEERING, BENGALURU-19

(Autonomous Institute Affiliated to VTU)

Scheme & Syllabus of Teaching for 2016-17

Subject	SOLID STATE POWER CONTROLLERS	Sub-code	16EEPE1CSP
Credits	06	L-T-P-S	4-0-1-1

Course outcomes:

CO1: Analyze the performance of single phase and three phase AC- DC converters..
CO2: Conduct experiment and simulation studies on single phase and three phase AC- DC converters.
CO3: Analyze the performance of single phase and three phase inverters.
CO4: Analyze different PWM schemes for voltage control and harmonic reduction in inverters.
CO5: Conduct experiment / simulation studies on single phase and three phase inverters.
CO6: Study the performance of different choppers
CO7: Conduct case study in a team.

Line Commutated Converters: Phase control, single phase semi-converter & fully controlled converter, three phase semi controlled & fully controlled converter, dual converters, power factor improvement methods, effect of source inductance, single phase series converters, twelve pulse converter and design of converter circuits.

Inverters: Principle of operation, performance parameters, single phase bridge inverters and three phase inverters.

Voltage Control of Single Phase Inverters: Single/multiple, pulse/SPWM/ modified SPWM methods, voltage control of three phase inverter, SPWM/third harmonic PWM/Space vector modulation, harmonic reduction, current source inverter, comparison between VSI & CSI.

Multilevel Inverters: Introduction, types, diode clamped multi-level inverters, features & applications.

DC-DC Converters: Principle of operation, analysis of step-down and step-up converters, classification of chopper & chopper circuit design.

Lab experiments:
Experimental and simulation studies on
- Converters
- Inverters and
- Choppers

REFERENCE BOOKS:

1. Ned Mohan, Tore M. Undeland, William P. Robbins, "Power Electronics Converters, Applications, and Design", 3rd Edition,Wiley India Pvt Ltd, 2011
2. Rashid M.H, "Power Electronics: Circuits Devices and Applications", 3rd Edition, Pearson, 2011.
3. B. K. Bose, "Modern Power Electronics & AC Drives", PHI, 2012.

BMS COLLEGE OF ENGINEERING, BENGALURU-19

(Autonomous Institute Affiliated to VTU)

Scheme & Syllabus of Teaching for 2016-17

Subject	MODELING AND SIMULATION OF POWER ELECTRONIC SYSTEMS	Sub-code	16EEPE1CMS
Credits	05	L-T-P-S	3-0-1-1

Course outcomes:

CO1: Able to apply mathematical skills to represent mathematically a physical system

CO2: Able to apply various modeling methods to develop mathematical modeling

CO3: Able to design and develop digital controllers to control current and voltage of a Power Electronics system.

CO4: Able to apply modern engineering software tools such as MATLAB software to develop model for various Power Electronics circuits.

CO5: Able to extract information through literature survey, apply appropriate design techniques and tools for simulation of Power Electronics based circuits published in conference/ journal papers.

CO6: Able to demonstrate capacity for self-management and teamwork, communicate regarding activities carried out as a part of self study confidently and effectively, to comprehend and write effective reports and design documentation.

Computer Simulation of Power Electronic Converters and Systems: Challenges in computer simulation, simulation process, Types of analysis, mechanics of simulation, circuit-oriented simulators, equation solvers, comparison of circuit oriented simulators and equation solvers.

Modeling of Systems: Input-Output relations, differential equations and linearization, state space representation, transfer function representation, modeling of an armature controlled DC Motor, poles and zeroes circuit averaging method of modelling approach for switched power electronic circuits, space vector modeling, space vectors, representation of space vectors in orthogonal co-ordinates, space vector transformations, modeling of induction motor, state space representation of the d-q model of the induction motor.

Digital Controller Design: Controller design techniques, Bode diagram method, PID controller, design, root locus method, state space method. Tracker, controller design, controlling voltage, controlling current.

Discrete Computation Essentials: Numeric formats, fixed -point numeric format, floating -point numeric format, tracking the base point in the fixed point system, addition of numbers, subtraction of numbers, multiplication of numbers, normalization and scaling, multiplication algorithm, arithmetic algorithm reciprocal, square root, reciprocal of square root, sine and cosine exponential, logarithm, implementation examples, pi controller, sine and cosine, pulse width modulation, space vector pwm, over-modulation.

Lab experiments:

- Modeling using state space representation, transfer function representation of a system.
- Modeling of an armature controlled DC motor
- Modeling of a Buck converter
- Three phase to two phase transformations
- Modeling of three phase Induction motors

- Controllers design techniques – Bode and root locus method
- PID controllers for voltage and current control

REFERENCE BOOKS:

1. Ned Mohan, Tore M. Undeland, William P. Robbins, "Power Electronics Converters, Applications, and design", 3rd Edition, John Wiley & Sons, 2009.
2. L.Umanand,"Power Electronics Essentials and Applications", 1st Edition, John Wiley & Sons, 2009.

BMS COLLEGE OF ENGINEERING, BENGALURU-19

(Autonomous Institute Affiliated to VTU)

Scheme & Syllabus of Teaching for 2016-17

ELECTIVE-1

Subject	DIGITAL MEASUREMENTS	Sub-code	16EEPE1EDM
Credits	03	L-T-P-S	3-0-0-0

Course outcomes:

CO1: Realize the significance of digital based measurements using Microprocessor/Microcontroller.

CO2: Analyze time and frequency measurement techniques and apply the knowledge for the design of various circuits.

CO3: Realize and design different D/A converters.

CO4: Design A/D converters and apply the concept of voltage measurement technique for various systems.

Philosophy of digital and microprocessor/microcontroller based instruments.

Time measurement techniques: measurement of time interval between events, Order of events, Vernier technique, very low time, period, phase time constant, Capacitance measurements, decibel meter.

Frequency measurement techniques: frequency ratio and product, high and low frequency measurements, deviation meter, tachometer, peak/valley recorder.

DACs: programmable amplifier as DACs, multistage WRDACs, weighted current, weighted reference voltage, weighted charge, DACs, ladder DACs, design of DACs with respect to spread and total resistance, hybrid multiplier and divider Circuits

Voltage measurement techniques: V/f and V/f converters, direct type ADC ramp, tracking, dual slope, successive approximation and flash type multistage flash type ADCs, DVM and its design .

REFERENCE BOOKS:

1. Rathore, T.S., “Digital Measurement Techniques”, Narosa Publishing House, 2003
2. Sonde., B.S., “Monographs on System Design Using Integrated Circuits”, Tata McGraw Hill, 1974
3. Defatta, D.J., Lucas, J.G., Hodgkiss, W.S., “Digital Signal Processing”, John Wiley and Sons, 1988.

BMS COLLEGE OF ENGINEERING, BENGALURU-19

(Autonomous Institute Affiliated to VTU)

Scheme & Syllabus of Teaching for 2016-17

Subject	MODELING AND ANALYSIS OF ELECTRICAL MACHINES	Sub-code	16EEPE1EMA
Credits	03	L-T-P-S	3-0-0-0

Course outcomes:

CO1: Apply basic concepts of modeling for DC Machines, three phase induction machine and synchronous machines.

CO2: Model a single phase & three phase transformers, autotransformers and transmission line**.**

CO3: Carry out the dynamic performance analysis of synchronous machines.

Basic Concepts of Modeling: Basic two pole machine representation of commutator machines, 3-phase synchronous machine with and without damper bar and 3-phase induction machine, Kron's primitive machine-voltage, current and torque equations.

DC Machine Modeling: Mathematical model of separately excited DC motor-steady state and transient state analysis, sudden application of inertia load, transfer function of separately excited DC motor, mathematical model of dc series motor, shunt motor, linearization techniques for small perturbations.

Reference Frame Theory: Real time model of a two phase induction machine, transformation to obtain constant matrices, three phase to two phase transformation, power equivalence.

Dynamic Modeling of Three Phase Induction Machine: Generalized model in arbitrary frame, electromagnetic torque, deviation of commonly used induction motor models-stator reference frames model, rotor reference frames model, synchronously rotating reference frames model, equations in flux linkages, per unit model, dynamic simulation.

Small Signal Equations of the Induction Machine: Derivation of small signal equations of induction machine, space phasor model, DQ flux linkages model derivation, control principle of the induction motor.

Modeling of Synchronous Machines: Introduction, voltage equations and torque equation in machine variables, stator voltage equations in arbitrary and rotor reference frame variables, Park's equations, torque equations in substitute variables, rotor angle and angle between rotors, per unit system, analysis of steady state operation.

REFERENCE BOOKS:

1. P.S.Bimbra, "Generalized Theory of Electrical Machines", 5th Edition, Khanna Publications, 1995.
2. R. Krishnan, "Electric Motor Drives - Modeling, Analysis & Control", PHI Learning Private Ltd, 2009.
3. P.C.Krause, Oleg Wasynczuk, Scott D. Sudhoff, "Analysis of Electrical Machinery and Drive Systems", 2nd Edition, Wiley (India), 2010.
4. Arthur R Bergen and Vijay Vittal, "Power System Analysis", 2nd Edition, Pearson, 2009.
5. PrabhaKundur, "Power System Stability and Control", TMH, 2010.
6. Chee-MunOng, "Dynamic Simulation of Electric Machinery using MATLAB / Simulink", Prentice Hall, 1998.

Subject	POWER ELCTRONICS IN SMART GRID	Sub-code	16EEPE1EPS
Credits	03	L-T-P-S	3-0-0-0

Course outcomes:
CO1: Acquire in-depth knowledge of Smart Grid, distributed generation, Electro Magnetic Compatibility (EMC) Cases in power system and analyze power quality problems in an electricity network.
CO2: Apply the concept of distributed generation and solve the problem of its integration with the existing power system network.
CO3: Select, learn and apply different active power controllers in appropriate places of power system network.
CO4: Acquire in depth knowledge of different energy storage system and solve the problem of energy storage in a smart, complex power system.

Introduction: Introduction to smart grid, electricity network, local energy networks, electric transportation, low carbon central generation, fundamental problems of electrical power systems, attributes of the smart grid, alternate views of a smart grid.

Power Control and Quality Problems: Introduction, power quality and EMC, power quality issues, monitoring, legal and organizational regulations, mitigation methods, and EMC related phenomena in smart system.

Integration of Distributed Generation with Power System: Distributed generation past and future, interconnection with a hosting grid, integration and interconnection concerns, distributed generation contribution to power quality problems and current challenges, power injection principle, injection using static compensators and advanced static devices.

Active Power Controllers: Dynamic static synchronous controllers, D – STATCOM, Dynamic static synchronous series controllers, dynamic voltage restorer, AC/AC voltage regulators.

Energy Storage Systems: Introduction, structure of power storage devices, pumped – storage hydroelectricity, compressed air energy storage system, flywheels, battery storage, hydrogen storage, super conducting magnet energy storage, super capacitors, applications of energy storage devices.

REFERRENCE BOOKS:
1. Strzelecki Benysek, “Power Electronics in Smart Electrical Energy Networks”, Springer, 2008.
2. Clark W Gellings, “The Smart Grid: Enabling Energy Efficiency and Demand Side Response”, CRC Press, 2009.

BMS COLLEGE OF ENGINEERING, BENGALURU-19

(Autonomous Institute Affiliated to VTU)

Scheme & Syllabus of Teaching for 2016-17

Subject	ADVANCED CONTROL SYSTEMS	Sub-code	16EEPE1EAC
Credits	03	L-T-P-S	3-0-0-0

Course outcomes:

CO1: Create state models for continuous and discrete time systems.

CO2: Identify appropriate techniques to analyze both continuous and discrete systems for controllability and observability

CO3: Apply relevant concepts to design continuous and discrete systems with state feedback to meet the specifications.

Digital Control Systems: Review of difference equations and Z - transforms, Z- transfer function (Pulse transfer function), Z - Transforms analysis, sampled data systems, stability analysis (Jury's Stability Test and Bilinear Transformation), pulse transfer functions and different configurations for closed loop discrete-time control systems.

Modern Control Theory: State model for continuous time and discrete time systems, solutions of state equations (for both continuous and discrete systems), concepts of controllability and observability (for both continuous and discrete systems), pole placement by state feedback (for both continuous and discrete systems), full order and reduced order observes (for both continuous and discrete systems), dead beat control by state feedback, optimal control problems using state variable approach, state regulator and output regulator, concepts of model reference control systems, adaptive control systems and design.

Non Linear Control Systems: Common nonlinearities, singular points, stability of nonlinear systems - phase plane analysis and describing function analysis, Lyapunov's stability criterion, Popov's criterion.

REFERENCE BOOKS:

1. Ogata. K. "Modern Control Engineering", 5th Edition, PHI, 2010.
2. Ogata K "Discrete Time Control Systems", 2nd Edition, PHI, 2011.
3. Nagarath and Gopal, "Control Systems Engineering", New Age International Publishers, 2012.
4. M Gopal "Modem Control System Theory", New Age International, 2011.
5. M. Gopal, "Digital Control & State Variable Methods", TMH, 2011.

ELECTIVE-II

Subject	EMBEDDED SYSTEM DESIGN	Sub-code	16EEPE1EES
Credits	03	L-T-P-S	3-0-0-0

Course outcomes:
CO1: Apply the basic concepts and design an embedded system for real time applications.
CO2: Create a platform to try novel ideas to provide different solutions for practical problems.
CO3: Realize a high performance processor to develop a real time system.
CO4: Recognize opportunities and contribute for the multidisciplinary research work.

Introduction to Embedded System: An embedded system, processor, hardware unit, software embedded into a system, example of an embedded system, OS services, real time and embedded OS.

Processor and Memory Organization: Structural unit in a processor, processor selection for an embedded systems, memory devices, memory selection for an embedded system, allocation of memory to program segments and blocks, and direct memory accesses.

Real Time System: Types, real time computing, design issues, ARM system architecture, high performance processors - strong ARM processors, addressing modes, instruction set, and few basic assembly language programs.

Real Time Operating System: Fundamental requirements of RTOS, real time kernel, schedulers, various scheduling modules, latency (interrupt latency, scheduling latency and context switching latency), tasks, state transition diagram, task control block. Inter-task communication and synchronization of tasks, Building real time applications.

REFERENCE BOOKS:
1. Rajkamal "Embedded System Architecture: Programming & Design", TMH, 2010.
2. David E. Simon, "An Embedded Software Primer", Pearson Education, 1999.
3. Philip. A. Laplante, "Real-Time Systems Design and Analysis- An Engineer's Handbook"- 2nd Edition, Pearson.
4. Jane W.S. Liu, "Real-Time Systems", Pearson Education Inc, 2012.
5. K.V.K K Prasad, "Embedded Real Time Systems: Concepts Design and Programming", Dreamtech Press New Delhi, 2003.

BMS COLLEGE OF ENGINEERING, BENGALURU-19

(Autonomous Institute Affiliated to VTU)

Scheme & Syllabus of Teaching for 2016-17

Subject	SOFT COMPUTING	Sub-code	16EEPE1ESC
Credits	03	L-T-P-S	3-0-0-0

Learning and Soft Computing: Examples, basic tools of soft computing, basic mathematics of soft computing, learning and statistical approaches to regression and classification.

Single-Layer Networks: Perceptron, Adaptive linear neuron (Adaline), and the LMS algorithm.

Multilayer Perceptrons: Error back propagation algorithm, generalized delta rule, practical aspects of error back propagation algorithm.

Radial Basis Function Networks: Ill-posed problems and the regularization technique, stabilizers and basic functions, generalized radial basis function networks.

Fuzzy Logic Systems: Basics of fuzzy logic theory, mathematical similarities between neural networks and fuzzy logic models, fuzzy additive models.

Support Vector Machines: Risk minimization principles and the concept of uniform convergence, VC dimension, structural risk minimization, support vector machine algorithms.

Case Studies: Neural-network based adaptive control, computer graphics.

REFERENCE BOOKS:

1. Vojislav Kecman, “Learning and Soft Computing”, Pea rson Education (Asia) Pvt. Ltd. 2004.
2. Simon Haykin, "Neural Networks: A Comprehensive Foundation", Pearson Education (Asia) Pvt. Ltd., Prentice Hall of India, 2008.
3. M.T. Hagan, H.B. Demuth and M. Beale, "Neural Network Design", Thomson Learning, 2002.
4. Bart Kosko, "Neural Networks and Fuzzy Systems", Prentice Hall of India, 2010.
5. George J. Klir and Bo Yuan, "Fuzzy Sets and Fuzzy Logic: Theory and Application", PHI, 2012.

Subject	CMOS VLSI DESIGN	Sub-code	16EEPE1ECV
Credits	03	L-T-P-S	3-0-0-0

Course outcomes:
CO1: Analyze the MOS concepts for various small signal operations.
CO2: Design of various CMOS VLSI Circuits by applying the concept of CMOS miniaturization**.**
CO3: Implementation of structured analog and digital circuits using NMOS & CMOS Functional blocks.
CO4: Apply the various MOS technologies for system design.

Review of MOS circuits: MOS and CMOS static plots, switches, comparison between CMOS and BI - CMOS.

MESFETS: MESFET and MODFET operations, quantitative description of MESFETS.

MIS structures and MOSFETS: MIS systems in equilibrium, under bias, small signal operation of MESFETS and MOSFETS.

Short channel effects and challenges to CMOS: Short channel effects, scaling theory, processing challenges to further CMOS miniaturization.

Beyond CMOS: Evolutionary advances beyond CMOS, Carbon Nano tubes, conventional vs. tactile computing, computing, molecular and biological computing, Mole electronics-molecular Diode and diode- diode logic .Defect tolerant computing,

Super buffers, Bi-CMOS and Steering Logic: Introduction, RC delay lines, super buffers- An NMOS super buffer, tri state super buffer and pad drivers, CMOS super buffers, Dynamic ratio less inverters, large capacitive loads, pass logic, designing of transistor logic, General functional blocks - NMOS and CMOS functional blocks.

Special circuit layouts and technology mapping: Introduction, Talley circuits, NAND-NAND, NOR- NOR, and AOI Logic, NMOS, CMOS Multiplexers, Barrel shifter, Wire routing and module lay out.

System design: CMOS design methods, structured design methods, Strategies encompassing hierarchy, regularity, modularity & locality, CMOS Chip design Options, programmable logic, Programmable inter connect, programmable structure, Gate arrays standard cell approach, Full custom Design.

REFERENCE BOOKS:
1. Kevin F Brrnnan "**Introduction to Semi-Conductor Device**", Cambridge publications, 2005.
2. Eugene D Fabricius "**Introduction to VLSI Design**", MGH, 1990,
3. D.A Pucknell "**Basic VLSI Design**", 3rd Edition, PHI Publication, 1994.
4. Wayne Wolf, "**Modern VLSI Design**" Pearson Education, 2nd Edition, 2002.

Subject	REAL TIME DIGITAL SIGNAL PROCESSING	Sub-code	16EEPE1ERT
Credits	03	L-T-P-S	3-0-0-0

Course outcomes:
CO1: Design filters using appropriate techniques.
CO2: Analyze a signal using FFT
CO3: Implement real time FIR Filter using Motorola DS5630X.

Digital Signal Processing Fundamentals: Review of DSP fundamentals ; FIR filter design by windowing; adaptive filtering techniques, Fourier analysis of signal using FFT, introduction to real time DSP and Motorola DS5630X, architecture, instruction set, addressing modes; simple 5630X program, real time digital FIR filter, real time LMS adaptive filters, real time frequency domain processing.

REFERENCE BOOKS

1. Oppenheim and Schafer, "Digital Signal Processing", Prentice Hall, 2011.
2. Philip L Se Leon, "Real Time Digital Signal Processing using the Motorola DSP S63OXEVM", 2002.
3. J G Proakis, Dimitris G Monolikis, "Digital Signal Processing: Principles, Algorithms and Applications" Pearson Education, 4th Edition, 2012.
4. Samuel Stearns, "Digital Signal Processing with Examples in MATLAB", CRC Press, 2011.

BMS COLLEGE OF ENGINEERING, BENGALURU-19

(Autonomous Institute Affiliated to VTU)

Scheme & Syllabus of Teaching for 2016-17

INSTITUTION CORE COURSE

Subject	RESEARCH METHODOLOGY	Sub-code	16EEPE1CRM
Credits	02	L-T-P-S	2-0-0-0

Meaning, Objectives and Characteristics of research - Research methods Vs Methodology - Types of research - Descriptive Vs. Analytical, Applied Vs. Fundamental, Quantitative Vs. Qualitative, Conceptual Vs. Empirical - Research process - Criteria of good research - Developing a research plan.

Defining the research problem - Selecting the problem - Necessity of defining the problem - Techniques involved in defining the problem - Importance of literature review in defining a problem - **S**urvey of literature - Primary and secondary sources - Reviews, treatise, monographs patents
- web as a source - searching the web - Identifying gap areas from literature review - Development of working hypothesis.

IPRs- Invention and Creativity- Intellectual Property-Importance and Protection of Intellectual Property Rights (IPRs)- A brief summary of: Patents, Copyrights, Trademarks, Industrial Designs- Integrated Circuits-Geographical Indications-Establishment of WIPO-Application and Procedures.

Aim of this part of the course: is to strengthen students minds towards high quality research through publications, patents and also to learn research ethics.
Publications (8-9 hours)
Research concepts (2 hour) Research importance on economy, Research in India and abroad, Importance of publications, Why, where, when to publish?
Publication ethics (2 hour), Plagiarism (how to use turn it in effectively), International ethics on research, What and what not to publish, Ethical guidelines, Case studies
Quality vs quantity (2 hour) Searching literature with high quality, Impact factor, Citations (google scholar vs web of science), H-index, Case studies.
How to write paper (2 hour), In High quality journals, Conference Articles, Poster preparation, PhD thesis, Inclusion of References.
Journal reviewing process (1 hour), Selection of the good journal, Knowledge bout journal template, Refereeing process, Research topic selection, Research today and tomorrow, Lab scale to Industry, Traditional research to Technology based research.

Interpretation and report writing - Techniques of interpretation - Structure and components of scientific reports - Different steps in the preparation - Layout, structure and language of the report - Illustrations and tables - Types of report - Technical reports and thesis

REFERENCES:

1. Garg, B.L., Karadia, R., Agarwal, F. and Agarwal, U.K., 2002. An introduction to Research Methodology, RBSA Publishers.
2. Kothari, C.R., 1990. Research Methodology: Methods and Techniques. New Age International. 418p.
3. Anderson, T. W., An Introduction to Multivariate Statistical Analysis, Wiley Eastern Pvt., Ltd., New Delhi
4. Sinha, S.C. and Dhiman, A.K., 2002. Research Methodology, Ess Ess Publications. 2 volumes.
5. Trochim, W.M.K., 2005. Research Methods: the concise knowledge base, Atomic Dog Publishing. 270p.
6. Day, R.A., 1992.How to Write and Publish a Scientific Paper, Cambridge University Press.
7. Fink, A., 2009. Conducting Research Literature Reviews: From the Internet to Paper. Sage Publications
8. Coley, S.M. and Scheinberg, C. A., 1990, "Proposal Writing", Sage Publications.
9. Intellectual Property Rights in the Global Economy: Keith Eugene Maskus, Institute for International Economics, Washington, DC, 2000
10. Subbarau NR-Handbook on Intellectual Property Law and Practice-S Viswanathan Printers and Publishing Private Limited.1998

II SEMESTER

Subject	AC AND DC DRIVES	Sub-code	16EEPE2CAD
Credits	05	L-T-P-S	3-0-1-1

Course outcomes:
CO1: Analyze AC-DC Drives circuits critically, in a wider theoretical context.
CO2: Apply appropriate techniques, design and tools, to conduct experiments and projects.
CO3: Develop simulation models for AC-DC drives systems prescribed in the curriculum.
CO4: Design the AC-DC drives circuits, conduct the experiments, compare and analyze the hardware results with that of simulation results.
CO5: Able to choose an appropriate research paper from latest IEEE conference/journal and analyze the work presented in the paper.
CO6: Able to carry out simulation and/or develop prototype model for the selected IEEE conference/journal paper.

Electric Drives: Introduction – block diagram-classification of electrical drives-choice of electrical drives-fundamental torque equation- components of load torque- steady state stability.

DC Drives: Single Quadrant Drive: 1-Phase semi and half wave converter drives, Two quadrant Drive: 1-phase and 3-phase full converter drive.

Two and Four Quadrant drive: 1-phase and three- phase dual converter drive, different braking methods and closed loop control of DC drives.

AC Drives: Voltage and current source inverter - inverter control-six step and PWM operation, Control of Induction motor drive -V/f and field oriented control – direct and indirect vector control, voltage and current source inverter fed induction motor drives, stator and rotor voltage control methods, slip energy recovery drives.

Closed Loop Control of AC Drives: Stator voltage control, V/f control, Slip regulation, speed control of static Kramer's drive, current control, brushless DC motor, stepper motor and variable reluctance motor drives.

Lab experiments:
Experimental/Simulation studies on
- Converter fed separately excited DC drives
- Chopper drives
- Speed control of 3 phase Induction motor

REFERENCE BOOKS:
1. Bose B. K, "Modern Power Electronics & AC Drives" PH I, 2011.
2. Murphy JMD, Turnbull F.G., "Thyristor Control of AC Motors" Pergamon Press Oxford, 1998.
3. R. Krishanan "Electric Motor Drives", EEE, PHI, 2010.
4. M.H Rashid, "Power Electronics, Circuits, Devices & Applications" Third Edition, PHI, New Delhi 2004.
5. High Performance Control of AC Drives "Haitham Abu - Rub, AtifIqbal, Jaroslaw Guzinski, Wiley, 2012.

Subject	SWITCHED MODE POWER CONVERSION	Sub-code	16EEPE2CSM
Credits	05	L-T-P-S	3-1-1-0

Course outcomes:

CO1: Analyze the performance of basic converters for CCM and DCM operation
CO2: Conduct experiment/simulation studies on basic converters for CCM /DCM operation
CO3: Carry out the performance analysis of derived converters
CO4: Conduct experiment/simulation studies on derived converters
CO5: Analyse the dynamic response of converter using state space averaging and design controller.
CO6: Analyze the performance of resonant converters.
CO7: Design of magnetic component for converters.

DC – DC Converters (Non isolated Converters): Principle of operation and analysis of buck converter analysis, inductor current ripple and output voltage ripple, capacitor resistance effect, synchronous rectification, design considerations, buck converter for discontinuous current operation, principle of operation and analysis of buck-boost converter analysis, inductors current ripple and output voltage ripple, design considerations, buck-boost converter for discontinuous current operation, principle of operation and analysis of CUK converter , inductor current ripple and output voltage ripple, capacitor resistance effect, design considerations, single ended primary inductance converter (SEPIC).

Isolated Converters: Introduction, transformer models, principle of operation and analysis of fly back converter-continuous and discontinuous current mode of operation, design considerations, principle of operation and analysis of forward converter, design considerations, double ended(Two switch) forward converter, principle of operation and analysis of push-pull converter, design considerations, principle of operation and analysis of full bridge and half-bridge DC-DC converters, design considerations, current fed converters, multiple outputs.

Control of DC-DC Converter: Modeling of DC-DC converters, power supply control, control loop stability, small signal analysis, switch transfer function, filter transfer function, PWM transfer function, Type-2 error amplifier with compensation, design, Type-3 error amplifier with compensation, design.

Resonant Converters: Introduction, resonant switch ZCS converter, principle of operation and analysis, resonant switch ZVS converter, principle of operation and analysis, series resonant inverter, series resonant DC-DC converter, parallel resonant DC-DC converter, series- parallel resonant DC-DC converter, resonant converters comparison, resonant DC link converter.

Introduction on design of Inductors and transformers: Design of inductor for Buck converter and transformer design for Forward converter as case studies.

Lab experiments:
Experimental/Simulation studies on
- Buck converter
- Boost converter
- Buck/Boost converter for CCM & DCM mode

- Flyback and forward converter
- Resonant converter

REFERENCE BOOKS:

1. Daniel W Hart, "Power Electronics", Tata McGraw Hill, 2011.
2. Rashid M.H., "Power Electronics – Circuits, Devices and Applications", 3rd Edition, Pearson, 2011.
3. D M Mitchel, "DC-DC Switching Regulator Analysis" McGraw-Hill Ltd, 1988.
4. Umanand L and Bhatt S R, "Design of Magnetic Components for Switched Mode Power Converters", New Age International, New Delhi, 2001
5. Ned Mohan, Tore M. Undeland, William P. Robbins, "Power Electronics Converters, Applications, and Design", 3rd Edition, Wiley India Pvt. Ltd, 2010.

Subject	FACTS CONTROLLERS	Sub-code	16EEPE2CFC
Credits	05	L-T-P-S	4-0-0-1

Course outcomes:
CO1: Justify the need for FACTS controllers in AC transmission lines.
CO2: Model and analyze the steady state characteristics of the AC transmission lines with and without the FACTS controllers.
CO3: Model and analyze various FACTS controllers derived from first principles.
CO4: Apply different FACTS controllers in AC transmission systems.
CO5: Choose a facts controller based IEEE paper, analyze, simulate and/or develop prototype and present the work carried out.

Introduction: Basics of power transmission networks - control of power flow in AC - transmission line- flexible AC transmission system controllers – application of FA CTS controllers in distribution systems.

AC Transmission Line and Reactive Power Compensation: Analysis of uncompensated AC Line - passive reactive power compensation - compensation by a series capacitor connected at the midpoint of the line - shunt compensation connected at the midpoint of the line - comparison between series and shunt capacitor - compensation by STATCOM and SSSC - some representative examples.

Static Var Compensator: Analysis of SVC - Configuration of SVC- SVC Controller – voltage regulator design - some issues - harmonics and filtering - protection aspects – modeling of SVC – applications of SVC.

Thyristor and GTO Controlled Series Capacitor: Introduction - basic concepts of controlled series compensation - operation of TCSC - analysis of TCSC- control of TCSC - modeling of TCSC for stability studies - GTO thyristor controlled series capacitor (GCSC) - mitigation of sub synchronous resonance with TCSC and GCSC - applications of TCSC.

Static Phase Shifting Transformer: General - basic principle of a PST - configurations of SPST improvement of transient stability using SPST - damping of low frequency power oscillations - applications of SPST.

Static Synchronous Compensator (STATCOM): Introduction - principle of operation of STATCOM - a simplified analysis of a three phase six pulse STATCOM - analysis of a six pulse VSC using switching functions - multi-pulse converters control of type 2 converters - control of type I Converters - multilevel voltage source converters - harmonic transfer and resonance in VSC, applications of STATCOM.
UPFC: Unified Power Flow Controller (UPFC) – Principle of operation – modes of operation – applications – modeling of UPFC for power flow studies.

REFERENCE BOOKS:
1. K.R Padiyar, "FACTS Controllers in Power Transmission and Distribution", New Age International, 2007.
2. Narain G Hingorani and L. Gyugyi, "Understanding FA CTS: Concepts and Technology of Flexible AC Transmission Systems", Wiley India, 2011.

3. Y. H. Song and A. T. Johns, "Flexible AC Transmission System", Institution of Engineering and Technology, 2009.
4. Mohan Mathur, R., Rajiv. K. Varma, "Thyristor – Based Facts Controllers for Electrical Transmission Systems", IEEE press and John Wiley & Sons, Inc.

BMS COLLEGE OF ENGINEERING, BENGALURU-19

(Autonomous Institute Affiliated to VTU)

Scheme & Syllabus of Teaching for 2016-17

ELECTIVE – III

Subject	POWER ELECTRONICS SYSTEM DESIGN USING ICs	Sub-code	16EEPE2EFC
Credits	03	L-T-P-S	3-0-0-0

Course outcomes:

CO1: Analyze power electronic systems using ICs and apply the knowledge in a theoretical context.

CO2: Design high performance power electronic circuits using different ICs for various applications.

CO3: Think laterally and originally to solve power electronic circuits, and evaluate problems for switching power supplies.

CO4: Analyze Power Plant control using Programmable Logic Controller.

Introduction: Measurement techniques for voltages, current, power, power factor in power electronic circuits, other recording and analysis of waveforms, sensing of speed.

Switching Regulator Control Circuits: Introduction, isolation techniques of switching regulator systems, PWM systems.

Commercial PWM Control ICs and their Applications: TL 494 PWM Control IC, UC 1840 Programmable off line PWM controller, UC 1524 PWM control IC, UC 1846 current mode control IC, UC 1852 resonant mode power supply controller.

Switching Power Supply Ancillary, Supervisory & Peripheral Circuits and Components: Introduction, Opto-couplers, self-biased techniques used in primary side of reference power supplies, Soft/Start in switching power supplies, current limit circuits, over voltage protection, AC line loss detection, Implementation of different gating circuits.

Programmable Logic Controllers (PLC): Basic configuration of a PLC, Programming and PLC, program modification, power plant control using PLCs.

REFERENCE BOOKS:

1. G. K. Dubey, S. R. Doradla, A. Johsi, and R. M. K. Sinha, "Thyristorised Power Controllers",
2. 2nd Edition, New Age International, 2010.
3. Chryssis "High Frequency Switching Power Supplies", 2ndEdition, MGH, 1989.
4. Unitrode application notes: http://www.smps.us/Unitrode.html

BMS COLLEGE OF ENGINEERING, BENGALURU-19

(Autonomous Institute Affiliated to VTU)

Scheme & Syllabus of Teaching for 2016-17

Subject	POWER QUALITY ISSUES AND MITIGATION	Sub-code	16EEPE2EPQ
Credits	03	L-T-P-S	3-0-0-0

Introduction: Introduction to power quality, overview of power quality phenomena, power quality and EMC standard.

Long Interruptions and Reliability Evaluation: Introduction, observation of system performance, standards and regulations, overview of reliability evaluation, reliability evaluation techniques, cost of interruptions, comparison of observation and reliability evaluation, examples.

Short Interruptions: Introduction, terminology, origin of short interruptions, monitoring of short interruptions, influence on equipment, single phase tripping, stochastic prediction of short interruptions.

Voltage Sags - Characterization: Introduction, voltage sag magnitude, voltage sag duration, three phase unbalance, phase angle jumps, magnitude and phase angle jumps for three phase unbalanced sags, other characteristic of voltage sags, load influence on voltage sags, sag due starting of induction motors.

Voltage Sags – Equipment Behavior: Introduction, computers and consumer electronics, adjustable speed AC drives, adjustable speed DC drives, other sensitive load.

Voltage Sags – Stochastic Assessment: Compatibility between equipment and supply, voltage sag coordination chart**,** power quality monitoring, method of fault positions, method of critical distances.

Mitigation of Interruptions and Voltage Sags: Overview of mitigation methods, power system design – redundancy through s witching and parallel operation, system equipment interface.

REFERRENCE BOOKS:

1. Math H J Bollen, “Understanding Power Quality Problems; Voltage Sags and Interruptions”, Wiley India, 2011.
2. Roger C Dugan, et.al, “Electrical Power Systems Quality”, 3rd Edition, TMH, 2012.
3. G T Heydt, “Electric Power Quality”, Stars in Circle Publications, 1991.
4. Ewald F Fuchs, et. el, “Power Quality in Power System and Electrical Machines”, Academic Press, Elsevier, 2009.

BMS COLLEGE OF ENGINEERING, BENGALURU-19

(Autonomous Institute Affiliated to VTU)

Scheme & Syllabus of Teaching for 2016-17

Subject	POWER SUPPLY SYSTEMS	Sub-code	16EEPE2EPS
Credits	03	L-T-P-S	3-0-0-0

Course outcomes:
CO1: Apply appropriate techniques, resources, and tools, including modeling, for different power supply circuits.
CO2: Demonstrate skills to the development of research in the domain of power supply systems.
CO3: Design and analysis of power supplies for different low and high power circuits.

Review: Linear Regulators, control of inverter and Converter with special modules, Transformer design by calculation and by monographs

Switching type power suppliers: Theory, noise consideration, switching of AC and DC voltages, voltage references and comparators – Switching type regulator

SMPS- Characteristics – Steady state Analysis control.

Methods: Design of feedback compression

UPS: Necessity types, typical layouts of UPS. Standalone High quality Electronics Power Supplies

REFERENCE BOOKS:
1. **Irving M. Gottilieb** "Power supplies, Switching Regulators, Inverters and Converters" BPB Publications - 1985
2. **P.R.K Chetty** "Switched Power Supply Design" BPB Publication- 1987
3. **Ned Mohan** "Power Electronics Converters, Applications and Design" John Wiley & Sons.
4. **Pressman,** "High Frequency Power Supplies" McGraw Hill
UPS Design Guide, International Rectifier

Subject	PWM CONVERTERS AND APPLICATIONS	Sub-code	16EEPE2EPW
Credits	03	L-T-P-S	3-0-0-0

Course outcomes:
CO1: Develop and analyze various PWM Techniques for converters.
CO2: Analyze & estimate the various losses in converters**.**
CO3: Model the PWM Converters and Induction motor drives**.**
CO4: Apply various compensation techniques for the converters.

AC/DC and DC/AC Power Conversion: Overview of applications of voltage source converters.

PWM Techniques: Pulse modulation techniques for I – phase bridges, bus clamping PWM, space vector based PWM, advanced PWM techniques.

Loss Calculations: Practical devices in converters, calculation of switching and conduction losses, compensation for dead time and DC voltage regulation.

Modeling: Dynamic model of PWM converters; constant V/F induction motor drives; estimation of current ripple and torque ripple in inverter fed drives.

Converters with Compensation: Line-side converters with power factor compensation, reactive power compensation, harmonic current compensation.

REFERENCE BOOKS:
1. Mohan, Undeland and Robbins, “Power Electronics: Converter, Applications and Design”, Wiley India, 2011.
2. Erickson RW, “Fundamentals of Power Electronics”, Chapman Hall, 1997.
3. Joseph Vithyathil, “Power Electronics- Principles and Applications”, TMH, 2011.

ELECTIVE-IV

Subject	DSP APPLICATIONS TO DRIVES	Sub-code	16EEPE2EDS
Credits	03	L-T-P-S	3-0-0-0

Course outcomes:
CO1: Identify the functionality of TMS320LF2407 DSP Controller.
CO2: Develop DSP based DC-DC Converters**.**
CO3: Develop DSP based control of various motors.

Introduction: To the TMS320LF2407 DSP Controller, C2xx DSP CPU architecture and instruction set. General Purpose Input/output (GPIO) functionality interrupts on the TMS320LF2407, Analog-to-Digital Converter (ADC), event managers (EVA, EVB).

DSP-Based Applications: Of DC-DC buck-boost converters, DSP based control of stepper motors, DSP-Based control of permanent magnet brushless DC machines, Park and Clarke's transformations. Space Vector Pulse Width Modulation, DSP-based control of permanent magnet synchronous machines.

DSP-based vector control of induction motors.

REFERENCE BOOKS:
1. Hamid Toliyat and Steven Campbell, “DSP-Based Electromechanical Motion Control”, CRC Press, 2011.
2. P.C. Krause, Oleg Wasynczuk, Scott D. Sudhoff, “Analysis of Electrical Machinery and Drive Systems”, 2nd Edition, Wiley India,2010
3. Chee-Mun Ong, “Dynamic Simulation of Electric Machinery using MATLAB / Simulink”, Prentice Hall, 1998.

Subject	POWER QUALITY ENHANCEMENT USING CUSTOM POWER DEVICES	Sub-code	16EEPE2EPC
Credits	03	L-T-P-S	3-0-0-0

Course outcomes:
CO1: Analyze the Power quality issues and concerns of the country.
CO2: Identify the type of Power quality problems with reference to IEEE/IET standards.
CO3: Analyze, evaluate and realize the control techniques for power quality problems.
CO4: Decide on choosing the necessary monitoring equipment and mitigation techniques.

Introduction and Characterization of Electric Power Quality: Electric Power Quality, Power Electronic applications in Power Transmission Systems, Power Electronic applications in Power Distribution Systems. Power Quality terms and Definitions, Power Quality Problems.

Analysis and Conventional Mitigation Methods: Analysis of Power Outages, Analysis of Unbalance , Analysis of Distortion, Analysis of Voltage Sag, Analysis of Voltage Flicker, Reduced Duration and Customer impact of Outages, Classical Load Balancing Problem, Harmonic Reduction, Voltage Sag or Dip Reduction.

Custom Power Devices: Introduction, Utility-Customer Interface, Custom Power Devices, Custom Power Park, Status of Application of CP Devices, Closed-Loop Switching Control, Second and higher order Systems.

Solid State Limiting, Breaking and Transferring Devices: Solid State Current Limiter, Solid State Breaker, Issues in Limiting and Switching operations, Solid State Transfer Switch, Sag/Swell Detection Algorithms.

Generation of Reference Parameter : Generating Reference Currents Using Instantaneous PQ Theory, Generating reference currents using instantaneous Symmetrical Components, General Algorithm for generating reference currents, Generating Reference currents when the Source is Unbalanced.

Active Power Filters: Series Active Filter**,** Shunt Active Filter, UPQC Configurations, Right-Shunt UPQC Characteristics, Left-Shunt UPQC Characteristics, Structure and Control of Right-Shunt UPQC, Structure and Control of Left-Shunt UPQC.

REFERRENCE BOOKS:
1. Arindam Ghosh et.al, Power Quality Enhancement Using Custom Power Devices, Kluwer Academic Publishers, 2002.
2. Math H J Bollen, “Understanding Power Quality Problems; Voltage Sags and Interruptions”, Wiley India, 2011.
3. Roger C Dugan, et.al, “Electrical Power Systems Quality”, 3rd Edition, TMH, 2012.
4. G T Heydt, “Electric Power Quality”, Stars in Circle Publications, 1991.
5. Ewald F Fuchs, et. el, “Power Quality in Power System and Electrical Machines”, Academic Press, Elsevier, 2009.
6. C. Shankaran “Power Quality”, CRC Press, 2013.

7. Ewald F Fuchs, et. el, "Power Quality in Power System and Electrical Machines", Academic Press, Elsevier, 2009.
8. C. Shankaran "Power Quality", CRC Press, 2013.

Subject	ELECTRO MAGNETIC COMPATIBILITY	Sub-code	16EEPE2EEM
Credits	03	L-T-P-S	3-0-0-0

Course outcomes:
CO1: Analyse the fundamentals and reasons for noise in Analog electronics, Power electronics and Digital electronics circuit.
CO2: Design and develop filters for Analog electronics, Power electronics and Digital circuits for reduction of noise.
CO3: Design the various types of grounding systems and get familiarised with handling electro static discharge systems, testing standards and Regulations.
CO4: Acquire knowledge about testing standards and regulations.

Review of EMI Theory: Sources of EMI, noise pick up modes and reduction techniques for analog circuits.

Emissions and Reduction Techniques: Use of co-axial cables and shielding of signal lines, conducted and radiated noise emission in power electronic equipment and reduction techniques, EMI induced failure mechanisms for power electronic equipment, EMC in design of digital circuits.

Electrostatic Discharge: ESD and switching interference reduction, susceptibility aspects of power electronic and digital equipment, shielding of electronic equipment.

REFERENCE BOOKS:
1. Otto H. W., "Noise Reduction Techniques in Electronic Systems", 2nd Edition, John Wiley and Sons, 1988.
2. Paul Clayton, "Introduction to Electromagnetic Compatibility", 2nd Edition, Wiley Inter science, 2006.
3. William B. Greason, "Electrostatic Damage in Electronics: Devices and Systems", John Wiley and Sons, 1 986.
4. Joseph Di Giacomo, "Digital Bus Hand Book", McGraw Hill Publishing Company, 1990.
5. White, R. J., "Handbook Series of Electromagnetic Interference and Compatibility", Don White consultants Inc. 1981.

BMS COLLEGE OF ENGINEERING, BENGALURU-19

(Autonomous Institute Affiliated to VTU)

Scheme & Syllabus of Teaching for 2016-17

Subject	HVDC POWER TRANSMISSION	Sub-code	16EEPE2EEM
Credits	03	L-T-P-S	3-0-0-0

Course outcomes:

CO1: Justify the application of AC or HVDC transmission systems based on the power transmission scenario such as quantum of power to be transferred, economics, reliability factors, etc.

CO2: Identify and analyze the various working components of the HVDC transmission systems.

CO3: Model and analyze the HVDC transmission systems.

CO4: Design and analyze various controllers and filters for HVDC systems.

DC Power Transmission Technology: Introduction, comparison with AC transmission, application of DC transmission, description of DC transmission system, Planning of HVDC transmission, modern trends in DC transmission, operating problems.

HVDC Converters: Introduction to Line commutated converter, choice of converter configuration for any pulse number, analysis of 6 and 12 pulse Graetz bridge converter without overlap, effect of smoothing reactor. Two and Three level voltage source converters, Pulse Width Modulation. Analysis of converter in two and three, and three and four valve conduction modes, LCC bridge characteristics, twelve pulse converter, detailed analysis of converters. Analysis of voltage source converters.

Control of Converters and HVDC link: DC link control principles, converter control characteristics, firing angle control, current and extinction angle control, Power control, Reactive power control, Control of voltage source converter.

Converter Faults and Protection: Converter faults, protection against over currents, over voltages in converter station, surge arrestor, protection against over voltages. Protection against faults in voltage source converter.

Smoothing Reactor and DC line: Smoothing reactors, Effects of corona loss, DC line insulators, Transient over voltages in DC line, Protection in dc line, Detection and protection of faults, DC breaker

Reactive Power Control: Reactive power control in steady state and transient state, sources of reactive power, SVC and STATCOM.

Harmonics and Filters: Introduction, Generation of harmonics, design of AC and DC filters

Multi Terminal DC Systems: Introduction, applications, types.

REFERENCE BOOKS:

1. K. R. Padiyar, “HVDC Power Transmission Systems”, New Age International, 2012.
2. E.W. Kimbark “Direct Current Transmission”, Vol.1, Wiley Inter-Science, London, 2006.
3. Arrilaga, “High Voltage Direct Current Transmission”, the Institute of Engineering and Technology, 2nd Edition, 2007.
4. S Kamakshaiah and V Kamaraju, “HVDC Transmission”, TMH, 2011.
5. Vijay K Sood, “HVDC and FACTs Controllers; Applications of Static Converters in Power Systems”, BSP Books Pvt. Ltd, First Indian reprint 2013.

INSTITUTION ELECTIVE

Subject	RENEWABLE ENERGY & PHOTOVOLTAICS	Sub-code	16EEPE2ERE
Credits	04	L-T-P-S	4-0-0-0

Course outcomes:
CO1: Understand the physics of photovoltaic system in depth.
CO2: Describe about solar radiation & measurement, cell characterization and solar constant.
CO3: Analyze the concept of charge controllers, MMPT Algorithms, economic aspects of PV systems.
CO4: Design and model PV cells & modules and analyze the issues related to grid integration, interfacing and power quality.

Introduction: Energy sources and their availability, commercial or conventional energy sources, new energy technologies, renewable energy sources, prospects of renewable energy sources.

Physics of Photovoltaic Systems: Introduction, doping, Fermi Level, p-n junction, p-n junction characteristics, photo voltaic effect, photovoltaic material, module, cell temperature.

Photovoltaic energy conversion: Solar radiation and measurements, solar constant, basic sun earth angles-definitions and their representation, solar cells and their characterization.

Solar electric system: Charge controllers, Maximum power point tracking algorithms, solar powered drives, economic analysis of PV systems and applications.

Grid integration of photovoltaics: Photovoltaic power plants, energy conversion, cell types, modelling of PV cells, modeling of PV modules, operation behavior, inverter types, grid interfacing and islanding detection, power quality, future developments.

Standalone photo voltaic Systems

REFERENCE BOOKS:
1. G.D. Rai, “Non-Conventional Energy Sources”, Khanna publishers.
2. Chenming Hu and R.M. White, “Solar Cells from Basics to Advanced Systems, McGraw Hill Book Co.
3. R.Strzelecki and G. Benysek, Editors “Power Electronics in Smart Electrical Energy Networks”, Springer.
4. G.N. Tiwari,”Solar Energy- Fundamentals, Design, Modelling and Applications” Narosa Publishing House.

Subject	MICRO & SMART SYSTEMS	Sub-code	16EEPE2EMS
Credits	04	L-T-P-S	4-0-0-0

Course outcomes:
CO1: Understand the concept of micromachining technologies namely vacuum pump, deposition techniques and lithography.
CO2: Distinguish between the main principle of operation of sensors & actuators.
CO3: Acquire in depth knowledge of characterization techniques like SEM, XRD and TEM.
CO4: Analyze different electronic circuits used to control micro systems.

Introduction: Review of material science, Microsystem versus MEMS, smart materials, structures and systems, integrated microsystems, applications of smart materials and microsystems.

Micromachining Technologies: Silicon as a material for micromachining, vacuum pumps, thin film deposition, ion implantation, lithography, etching, silicon micromachining, specialized materials for micro systems, advanced processes for micro fabrication.

Micro Sensors, Actuators, Systems and Smart Materials: Silicon Capacitive Accelerometer, piezoresistive pressure sensor, conductometric gas sensor, electrostatic comb drive, magnetic microrelay, portable blood analyzer.

Characterization techniques: Introduction, film thickness, scanning electron microscopy (SEM), transmission electron microscopy (TEM), X-Ray diffraction (XRD), X-ray energy dispersive analysis (EDX).
Electronic Circuits and Control for Micro and Smart Systems: Semiconductor devices, electronics amplifiers, practical signal conditioning circuits for microsystems, circuits for conditioning sensed signals, introduction to control theory, implementation of controllers.

Integration of micro and smart systems: Integration of microsystems and microelectronics, microsystems packaging, case studies of integrated microsystems.

Scaling effects in microsystems: Scaling in the mechanical domain, electrostatic domain, magnetic domain, thermal domain, scaling in diffusion, scaling in fluids, scaling effects in the optical domain, scaling in biochemical phenomena.

REFERENCE BOOKS:
1. G.K. Ananthasuresh, K.J. Vinoy, S. Gopalakrishnan, K.N. Bhat, V.K. Aatre, “Micro and Smart Systems”, Wiley- India.
2. Milton Ohring, “Materials Science of Thin Films” 2nd Edition, ELSEVIER, 2012.
3. MEMS Lecture Series (CDS) by Shanthiram Kal.

III SEMESTER

BMS COLLEGE OF ENGINEERING, BENGALURU-19

(Autonomous Institute Affiliated to VTU)

Scheme & Syllabus of Teaching for 2016-17

Subject	INTERNSHIP	Sub-code	16PEPC3CIN
Credits	21	L-T-P-S	0-0-21-0

COURSE OUTCOMES

CO1: Get an insight into the company profile and understand the organizational structure.
CO2: Apply and correlate theory and practice.
CO3: Communicate effectively regarding complex Engineering activities.
CO4: Demonstrate knowledge and understanding of Engineering & Management principles of the company.
CO5: Engage in life-long learning with a commitment to improve knowledge and competence continuously.
CO6 : Acquire professional & intellectual integrity and its impact on the society.
CO7 : Observe and examine critically and make corrections cautiously

Subject	PROJECT WORK (I- PHASE)	Sub-code	16PEPC3CIP
Credits	04	L-T-P-S	0-0-4-0

COURSE OUTCOMES

CO1: Carry out literature survey, and formulate a complex engineering problem.
CO2: Apply the fundamental knowledge of mathematics, engineering and Power Electronics principles in design of solutions or system components
CO3: Identify, Select, and apply a suitable engineering/IT tool in modeling/data interpretation /analytical studies, conduct experiments leading to a logical solution.
CO4: Design a system/system component, simulate and test its functioning as a solution to a complex engineering problem..
CO5: Develop a protoype model for the project work
CO6 : Develop good technical reports and publications in reputed conferences / journals based on project work results.
CO7 : Communicate effectively the work carried out before the expert committee.

IV SEMESTER

Subject	PROJECT WORK (FINAL PHASE)	Sub-code	16PEPC4CPR
Credits	23	L-T-P-S	0-0-23-0

COURSE OUTCOMES

CO1: Carry out literature survey, and formulate a complex engineering problem.
CO2: Apply the fundamental knowledge of mathematics, engineering and Power Electronics principles in design of solutions or system components
CO3: Identify, Select, and apply a suitable engineering/IT tool in modeling/data interpretation /analytical studies, conduct experiments leading to a logical solution.
CO4: Design a system/system component, simulate and test its functioning as a solution to a complex engineering problem..
CO5: Develop a protoype model for the project work
CO6 : Develop good technical reports and publications in reputed conferences / journals based on project work results.
CO7 : Communicate effectively the work carried out before the expert committee.
CO8: Manage project work in the core Power Electronics domain within the stipulated time

Subject	TECHNICAL SEMINAR	Sub-code	16PEPC4CTS
Credits	02	L-T-P-S	0-0-2-0

COURSE OUTCOMES

CO1: Carryout literature survey, and choose a relevant topic reported in recent IEEE conference publications / transactions in the domain of Power Electronics
CO2: Simulate and analyse the results reported in the chosen paper for seminar topic.
CO3: Communicate effectively and develop technical reports.
CO4: Respond to the queries by the evaluation committee and audience

RUBRICS FOR PROJECT WORK EVALUATION OF PG POWER ELECTRONICS PROGRAMME

Parameters for evaluation	**Excellent (>=9)**	**Very good (>=7 and<9)**	**Good (>=6 and <7)**	**Average (>=4 and <6))**
Scholarship of knowledge	Acquired in-depth knowledge through exhaustive literature survey Able to evaluate and carry out analysis independently with wider perspective.	Sufficient literature survey Able to evaluate and carryout analysis reasonably well.	Moderate literature survey Able to evaluate and carryout analysis satisfactorily.	Not very much clear about the project work. Not able to evaluate and analyse independent ly
Critical Thinking	Apply independent judgment to synthesize information for the project work and to create advances for conducting research.	Apply independent judgment to synthesize information for the project work	Moderately able to synthesize information for the project work.	Partially able to synthesize information for the project work.
Problem Solving	Think laterally and originally, solve problems independently related to project work.	Think originally to solve problems with assistance.	Moderately able to solve problems with assistance.	Partially able to solve problems with assistance.
Research Skill	Apply appropriate techniques, design and implement project work. Publication out of project work results in a reputed journal / IEEE conference	Apply appropriate techniques, design and implement project work. Publication out of project work results in a IEEE conference.	Apply appropriate techniques, design and implement project work. Publication out of project work results in a national conference.	Apply appropriate techniques, design and implement project work.

Usage of modern tools	Usage of software tools for exhaustive simulation and analysis and assess the performance of the system.	Moderate Usage of software tools for simulation and analysis and assess the performance of the system.	Moderate Usage of software tools for simulation and analysis and not able to clearly assess the performance of the system.	Not adequately used software tools for simulation and analysis
Collaborative and Multidisciplinary work	Carried out multidisciplinary project work, ability in decision making	Carried out multidisciplinary project work.	Carried out multidisciplinary project work integrated with basic Electrical courses.	Project in the domain of Power Electronics.
Project Management and Finance	Able to manage projects efficiently in respective disciplines.	Able to manage projects moderately in respective disciplines.	Able to manage projects partially in respective disciplines.	Not able to manage projects in respective disciplines
Communication	Able to communicate confidently and effectively. Able to answer all the queries by the experts' panel.	Able to communicate confidently and effectively. Able to answer few of the queries by the experts panel	Moderately able to communicate and answer few of the queries by the experts panel	Not able to communicate confidently and effectively.
Life-long Learning	Commitment to improve knowledge and competence continuously with a high level of enthusiasm.	Commitment to improve knowledge and competence continuously.	Commitment to improve knowledge and competence.	Not enthusiastic in improving the knowledge and competence
Ethical Practices and Social Responsibility	Able to contribute to the community for sustainable development of society.	Able to contribute to the community.	Partially able to contribute to the community.	Not able to contribute to the community.
Independent and Reflective Learning	Able to make corrective measures in the project independently, based on previous mistakes without depending on external feedback.	Able to make corrective measures in the project independently, based on previous mistakes with assistance.	Able to make corrective measures in the project with guidance.	Not able to make corrective measures in the project.

RUBRICS FOR INTERNSHIP EVALUATION OF PG POWER ELECTRONICS PROGRAMME

Parameters for evaluation	**Excellent (>=9)**	**Very good (>=7 and<9)**	**Good (>=6 and <7)**	**Average (>=4 and <6))**
Scholarship of knowledge	Acquired in-depth knowledge about internship	Sufficient knowledge about internship	Moderate knowledge about internship.	Not very much clear about the internship work.
Critical Thinking	Apply independent judgment to synthesize information for the internship.	Apply sufficient judgment to synthesize information for the internship work.	Moderately able to synthesize information for the internship work.	Partially able to synthesize information for the internship work.
Problem Solving	Think laterally and originally, solve problems independently related to internship work.	Think originally to solve problems with assistance.	Moderately able to solve problems with assistance.	Partially able to solve problems with assistance.
Research Skill	Apply appropriate techniques, design and implement internship assignments independently.	Apply appropriate techniques, design and implement internship assignments with assistance.	Apply appropriate techniques, design and implement partially internship assignments	Study of existing system in Industry.
Usage of modern tools	Usage of software tools for exhaustive simulation and analysis and assess the performance of the system.	Moderate Usage of software tools for simulation and analysis and assess the performance of the system.	Moderate Usage of software tools for simulation and analysis and not able to clearly assess the performance of the system.	Not adequately used software tools for simulation and analysis.
Collaborative and Multidisciplinary work	Carried out multidisciplinary internship work, ability in decision making	Carried out multidisciplinary internship work.	Carried out multidisciplinary internship work integrated with basic Electrical courses.	Internship in the domain of Power Electronics.

Project Management and Finance	Able to manage internship assignments efficiently in respective disciplines.	Able to manage internship assignments moderately in respective disciplines.	Able to manage internship assignments partially in respective disciplines.	Not able to manage internship assignments in respective disciplines
Communication	Able to communicate confidently and effectively. Able to answer all the queries by the experts' panel.	Able to communicate confidently and effectively. Able to answer few of the queries by the experts panel	Moderately able to communicate and answer few of the queries by the experts panel	Not able to communicate confidently and effectively.
Life-long Learning	Commitment to improve knowledge and competence continuously with a high level of enthusiasm.	Commitment to improve knowledge and competence continuously.	Commitment to improve knowledge and competence.	Not enthusiastic in improving the knowledge and competence
Ethical Practices and Social Responsibility	Able to contribute to the community for sustainable development of society.	Able to contribute to the community.	Partially able to contribute to the community.	Not able to contribute to the community.
Independent and Reflective Learning	Able to make corrective measures in the internship assignments independently, based on previous mistakes without depending on external feedback.	Able to make corrective measures in the internship assignments independently, based on previous mistakes with assistance.	Able to make corrective measures in the internship assignments with guidance.	Not able to make corrective measures in the internship assignments.